Developer of Uniqueness

Haier ABC Port Air Condition Units

AC - KNX Gateway

Product Manual

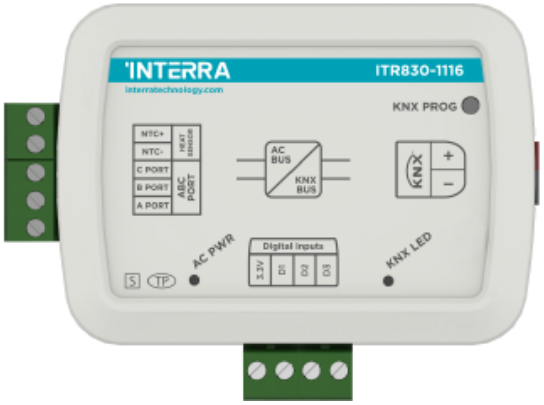

© 2024 INTERRA

Table of Contents

1. Content of The Document 6
2. Product Description 7
2.1. Technical Information 8
2.2. Model and Variations 9
2.3 Dimensions 9
2.4. Connection Diagram & Features 10
3. ETS Parameters & Descriptions 15
3.1. General Page 16
3.1.1. Parameters List 17
3.2. Logic Gate 20
3.2.1. Parameters List 22
3.3. Converter 24
3.3.1. Parameters List 26
3.4. Digital Input 29
3.4.1. Parameters List 30
3.5. Operating Mode 32
3.5.1. Parameters List 35
3.6. Fan Speed 37
3.6.1. Parameters List 39
3.7. Air Deflectors 41
3.7.1. Parameters List 43
3.8. Temperature 44
3.8.1. Parameters List 46
3.9. Scenes 48
3.9.1. Parameters List 49
3.10. Special 50
3.10.1. Parameters List 52
3.11. Addressing 55
3.11.1. Parameters List 55
4. ETS Objects List & Descriptions 56
4.1. General Objects 57
4.2. Logic Gate Objects 58
4.3. Converter Objects 59
4.4 Digital Input Objects 59
4.5. Operating Mode Objects 60

4.6. Fan Group Objects 63
4.7. Temperature Group Objects 65
4.8. Air deflectors Group Objects 66
4.9. Scene Group Objects 67
4.10. Special Group Objects 68
Appendix 70

Information contained in this publication regarding device applications and the like is provided only for your convenience and may be superseded versions by updates. It is your responsibility to ensure that your application meets your specifications.

INTERRA MAKES NO REPRESENTATIONS OR WARRANTIES OF ANY KIND WHETHER EXPRESS OR IMPLIED, WRITTEN OR ORAL, STATUTORY OR NONSTATUTORY, RELATED TO THE INFORMATION INCLUDING BUT NOT LIMITED TO ITS CONDITION, QUALITY, PERFORMANCE, MERCHANTABILITY OR FITNESS FOR PURPOSE.

Interra disclaims all liability arising from this information and its use. Use of Interra devices in life support and/or safety applications is entirely at the buyer's risk, and the buyer agrees to defend, indemnify and hold harmless Interra from any damages, claims, suits, or expenses resulting from such use. No licenses are conveyed, implicitly or otherwise under any Interra intellectual rights.

Trademarks

The Interra name and logo and the Interra ITR830–X1XX Haier ABC Port AC – KNX Gateway devices are registered trademarks of Interra Technology in Turkey and other countries.

All other trademarks mentioned herein are property of the Interra Technology.

© 2023, Interra, Printed in Turkey, All Rights Reserved.

Printed on recycled paper.

TS EN ISO 9001:2008

TO OUR CUSTOMERS

One of our most important aims is to provide you with the best documentation possible to use successfully your Interra products. Focusing on this, we will keep on improving our documentation to better suit your needs. Our publications will be updated as new volumes as soon as changes are introduced.

If you have any questions or comments regarding this publication, do not hesitate to contact us:

E-mail: info@interratechnology.com

Tel: +90 (216) 326 26 40 Fax: +90 (216) 324 25 03

Most Current Product Manual

To obtain the most up-to-date version of this product manual, please visit our Web site at:

http://www.interratechnology.com

You can determine the version of an Interra document by examining its literature number found on the bottom right corner of any page.

The first two letters of the literature are the type of document. The numbers that follow are the creation date of the document and the last letter is the version (e.g., PM181017001A is the version A of a product manual created on the date 17/10/18.

©2024 INTERRA

1. Content of The Document

This document contains Interra brandmark's ITR830-X1XX Haier ABC Port AC - KNX Gateway coded devices' electronic and all essential feature information for programming these products. Each subtitle is explained the characteristics of the device. Modifications of the product and special change requests are only allowed in coordination with product management.

©2024 INTERRA

2. Product Description

ITR830-X1XX is an air conditioner gateway that is used for monitoring and controlling all the functioning parameters of Haier air conditioners via the KNX bus line. Haier AC - KNX Gateway is compatible with models in VRF types categorized incompatibility list sold by Haier.

Haier VRF AC - KNX Gateway has an easy installation feature and can be installed inside the own AC indoor unit or a proper location away from the air conditioner, it connects one side directly to the electronic circuit of the AC indoor unit and in the other side directly to the KNX bus so, Haier Gateway provides bidirectional communication between KNX bus and HBS.

- ITR830-X1XX device, provides complete bi-directional integration of Haier ABC Port AC with KNX bus.
- The device provides extra communication objects for giving maximum flexibility.
- Includes 4 logical and 8 converter advanced parameters for energy savings, configurable scenes, temperature limits etc.
- The AC unit provides error notifications for errors that may occur in exceptional cases.
- An ambient temperature value is provided to the Air Conditioner Unit. The temperature value can be acquired from the Temperature input of the AC Gateway or, alternatively, through a KNX object from other KNX devices.
- Via 3 digital inputs, external devices can be connected.
- Up to 5 different modes are available to determine the operating mode such as; auto, heat, cool, fan, and dry.
- Haier VRF type AC Indoor unit can be controlled simultaneously by the remote controller of the AC unit and Gateway
- Haier ABC Port AC indoor unit monitoring from KNX, including monitoring of AC unit's state of internal variables, running working hours counter (E.g., for filter maintenance control), and error indication and error code.
- Control of the AC unit based on the ambient temperature read by the own AC unit, or in the ambient temperature read by any KNX thermostat.
- Special functions for high-level monitoring; window contact, working hours counter, standby and timer function.

©2024 INTERRA

2.1. Technical Information

The following table shows the technical information of the Haier ABC Port Gateway.

Product Code	ITR830-X1XX
Power Supply	KNX Power Supply
Power Consumption	5 mA
Push Buttons	1 x KNX Programming Button
LED Indicators	1 x KNX Programming LED 1 X AC Power LED
Inputs	3 Digital Inputs*
Type of Protection	IP 20
Mode of Commissioning	S-Mode
Temperature Range	Operation (-10℃...70℃) Storage (-25℃...100℃)
Maximum Air Humidity	< 90 RH
Colour	Light Grey
Dimensions	88 x 62 x 27 mm (W x H x D)
Certification	KNX Certified
Configuration	Configuration with ETS

*: Depends on **Models**

©2024 INTERRA

2.2. Model and Variations

ITR830- X_1 1 X_2 X_3		
X_1	**0:** No Digital Input	**1:** Digital Input
X_2 X_3	**01:** 1 Channel	**04:** 4 Channels
	08: 8 Channels	**16:** 16 Channels

Table 1: Model and Variations Table

2.3 Dimensions

All values given in the device dimensions are millimetres.

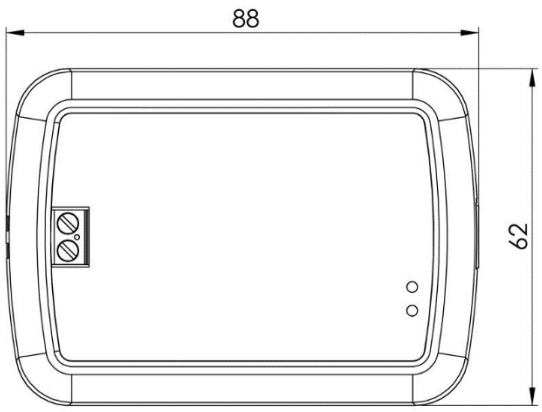

Fig. 1: Dimensions of Haier ABC Port AC - KNX Gateway from the top view

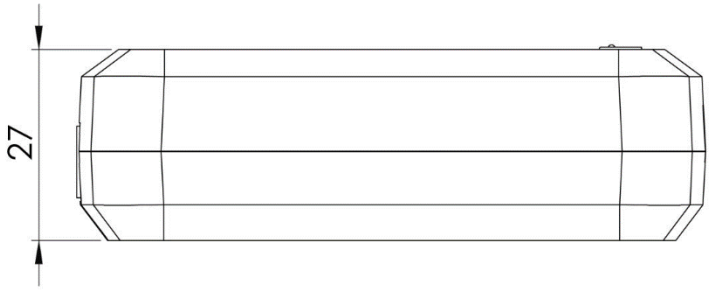

Fig. 2: Dimensions of Haier ABC Port AC - KNX Gateway from the side view

©2024 INTERRA

2.4. Connection Diagram & Features

Once the device is provided with a power supply from the KNX bus, both the physical address and the associated application program can be downloaded.

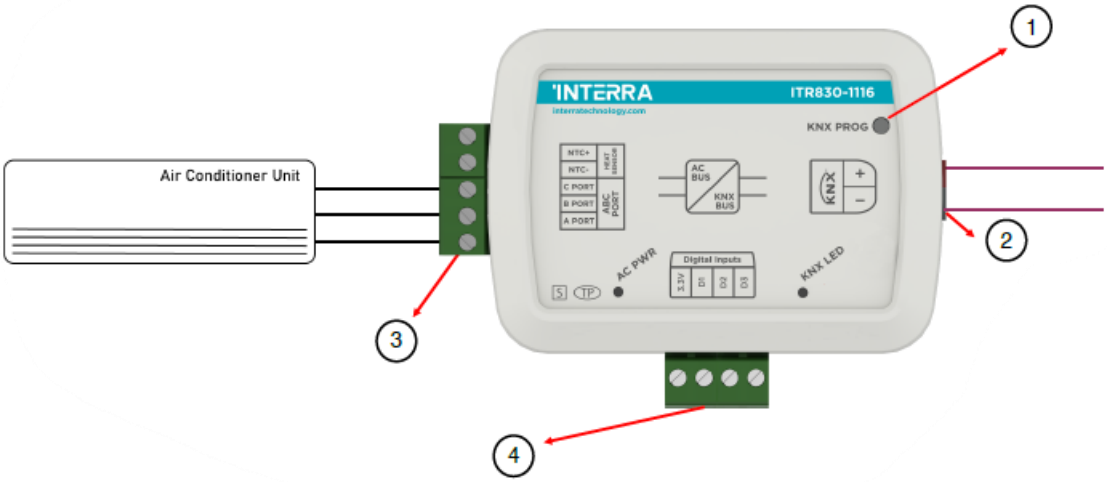

Fig. 3: Diagram of Haier ABC Port AC - KNX Gateway

Number	Feature
1	Programming Button
2	KNX Connector
3	AC Indoor Unit connection
4	Digital Inputs Connector

Table 2: Haier ABC Port AC – KNX Gateway Diagram

©2024 INTERRA

Haier ABC Port AC - KNX Gateway can be connected directly to the ABC Port bus terminal of the AC indoor unit. Nothing that needs to do in ETS software. The following figure shows the Haier ABC Port Gateway connection without the remote controller.

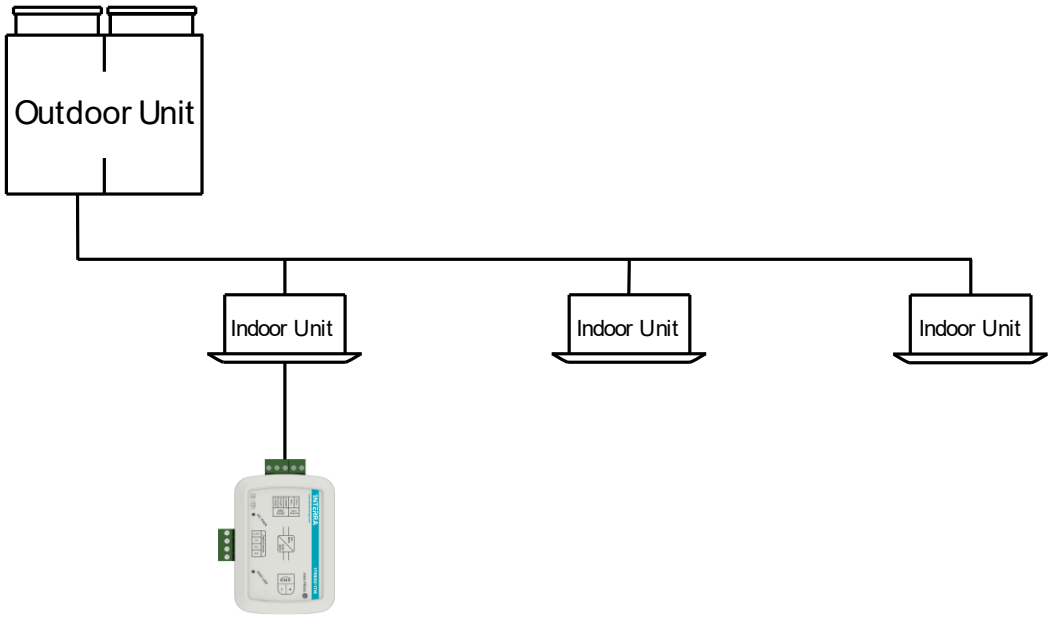

Fig. 4: Haier ABC Port Gateway Connection Diagram without Haier ABC Port Remote Controller

- Indoor unit address of the air conditioners must be “0” (AC Indoor Unit address can adjust through SW1 dip switches on indoor unit PCB.

©2024 INTERRA

Haier ABC Port AC - KNX Gateway can be connected with Haier ABC Port Remote Controller to the ABC Port bus terminal of the AC indoor unit. In this case, the remote control unit must be selected as Master in the Haier ABC Port Gateway ETS configuration. The following figure shows the Haier ABC Port Gateway connection with the remote controller.

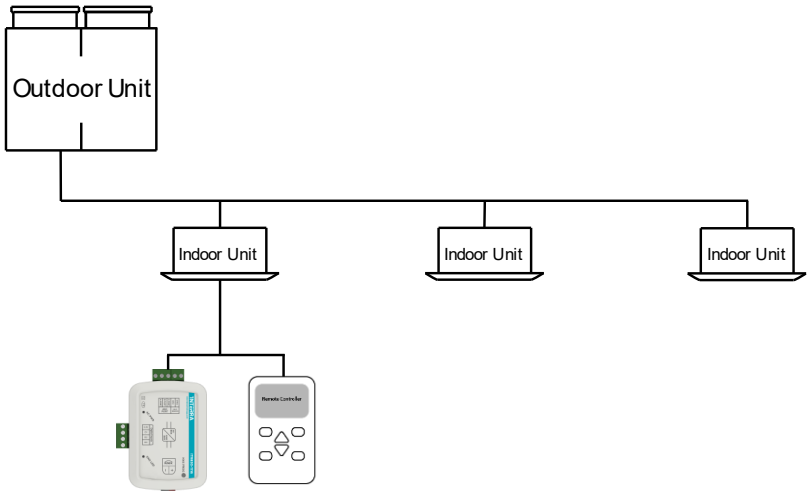

Fig. 5: Haier ABC Port Gateway Connection Diagram with Haier ABC Port Remote Controller

- Either one of wired controllers can be set as the master wired controller and the other as the slave wired controller
- If gateway is master, the wired remote must be slave. In this situation slave WR only used for observation. Check out "Master and Slave Features"
- If the wired remote is master, gateway must be slave. Check out "Master and Slave Features"
- Alternatively Gateway and wired remote both can works as slave.
- Indoor unit address of the air conditioners must be "0" (AC Indoor Unit address can adjust through SW1 dip switches on indoor unit PCB.

©2024 INTERRA

Figure 6 shows the connection diagram between the Haier ABC Port AC-KNX Gateway, air conditioner remote controller and multiple air conditioner indoor units. If more than 2 indoor units are to be connected to an air conditioner remote controller, care must be taken to ensure that the connection is as shown in Figure 6. Some indoor unit models do not support multi indoor unit control.

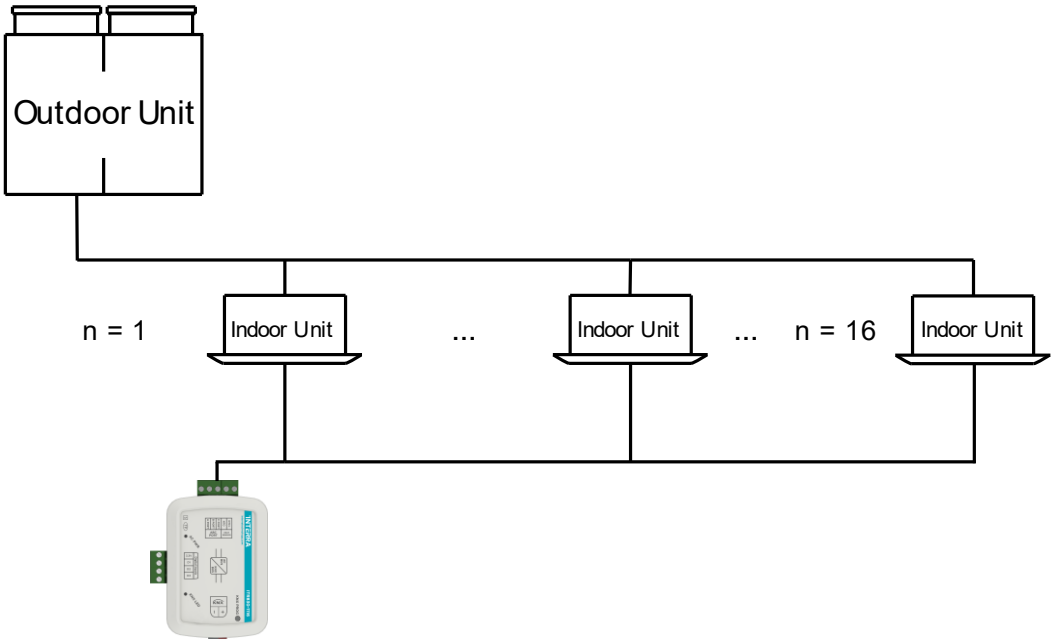

Fig. 6: Haier ABC Port Gateway Connection Diagram + Multi Indoor Unit

- The device can control all of connected indoor units individually.
- The device can work as Master or Slave.
- The Wired Controller as Slave or Master can not be connected. Because the wired remote controls all of the IDUs not individually.
- ABC port must be used to connect the wired controller and the master unit and other units (the indoor unit connected with wire controller directly).
- Indoor unit address of one of the air conditioner must be “0” and other’s address should be different from each other. (AC Indoor Unit address can adjust through SW1 dip switches on indoor unit PCB.
- After address setting don’t forget the configure addresses in ETS.

Recommendation
We don’t suggest the connection of wired remote in multible connection method because the wired remote will send the command to all connected indoor unit same but gateway controls them individually.

Important Notes for multiple connection
● SW01 (Depends type of AC, please contact with your technical service of air conditioner) is used for indoor unit group control address must be configured. **● Because of this switch used for group control the indoor units that configured SW1 switch may not be seen in centralized controller unit.** **● Wireless remote controller may not work due to SW1 configuration.**

©2024 INTERRA

Commissioning Instructions
-> First, disconnect the Air Conditioner from mains power. **-> Then, disconnect the power supply of the EIB bus.** **-> Install the interface and connect it to the ABC bus at any point of the bus. The ABC bus is the bus that connects the AC indoor unit and the wired remote controller** **-> Connect the KNX bus to the KNX connector of the interface according to polarity.** **-> Reconnect the AC indoor unit to mains power and power supply to the KNX bus.**

Master and Slave Mode Features

Master Mode	Slave Mod
The command sent from any other device becomes valid. This change can be observed on the KNX bus	The command sent from any other device becomes valid. This change can be observed on the KNX bus.
A second master control cannot be connected in parallel.	If there is a master controller connected to the system, the temperature data sent from slave gateway will be invalid. The temperature data of the control in master mode is valid.
After the device is reset, device sends the values stored in the eeprom according to the ETS parameter option.	After the device is reset, it reads the air conditioner data during initialize and sends the values there to the line. Not the values in the eeprom.
	Any slave controller can be connected in parallel. Commands can also be sent from this controller.
	Slave mode can also work alone, it can run the system. However, it only sends query commands periodically. If a command comes from KNX, it sends it to the air conditioner.

Table 2: Master and Slave Mode Features Table

©2024 INTERRA

3. ETS Parameters & Descriptions

In this chapter, the ETS parameters of the Haier ABC Port AC - KNX Gateway device are described using the parameter pages and options. The parameter page features are dynamic structures which means further parameters and parameter pages are enabled depending on the configuration and function of the groups.

In this section, a detailed description of the functional features of the device is given. All the parameters of the device are explained under the relevant headings.

In the ETS parameter configuration pages, each of the parameters has got a default parameter value. These default values are written in bold.

- E.g. : > Setpoint shifting ●**via parameter** via communication object

Special Notes
This is a fully compatible KNX device that must be configured and set up using the standard KNX tool ETS.

In the following sections, there is a detailed explanation about each of the different functionalities of Haier ABC Port AC - KNX Gateway in ETS.

©2024 INTERRA

3.1. General Page

When the Haier ABC Port AC Gateway is attached to the project from the ETS program, a configuration setting must be made primarily before loading. When entering the “GENERAL” in the parameter page, the configuration screen will be appeared shown below. Global parameter settings for the whole device are made in this window. From the general configuration window, the different advanced functionalities of the Haier ABC Port AC Gateway can be enabled such as Module alive beacon, Behaviours after bus voltage failure, Device control locking, Errors Management, Initial Configuration.

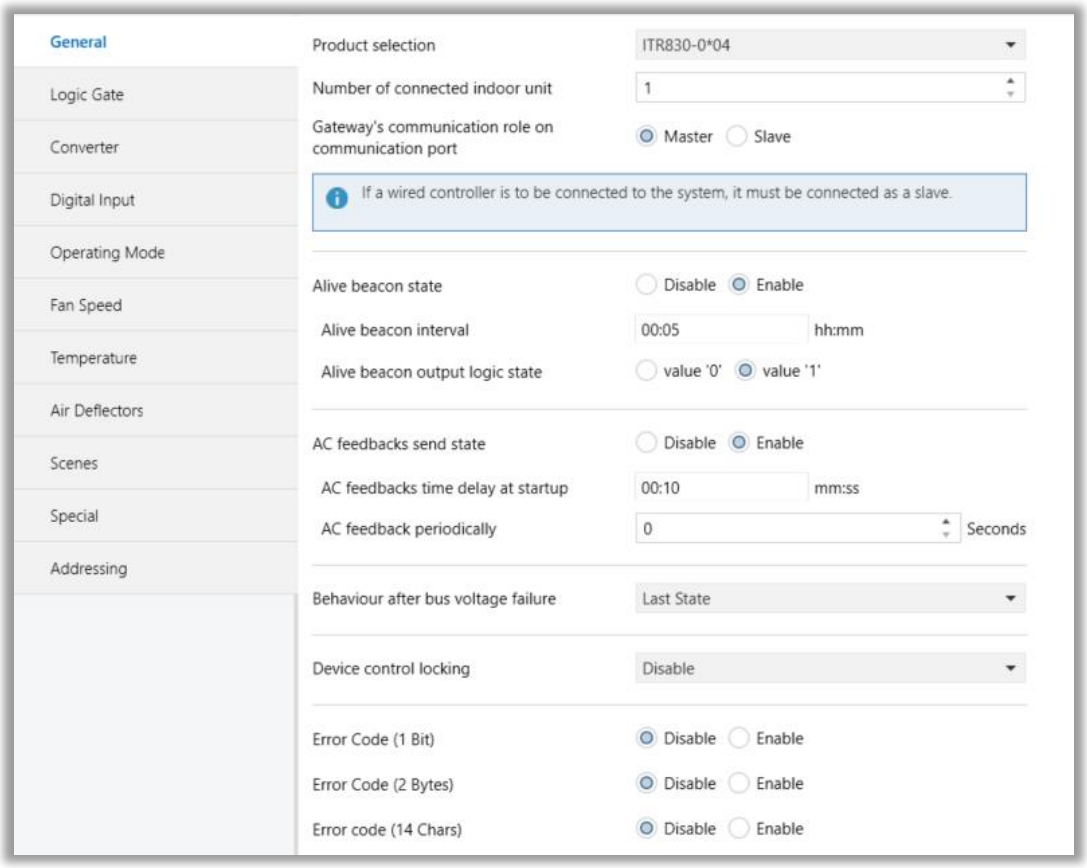

Fig. 7: General Configuration Parameter Page

©2024 INTERRA

3.1.1. Parameters List

PARAMETERS	DESCRIPTION	VALUES
Product selection	This feater is used to identify ETS application with hardware device. Minimum 4, Maksimum 16 devices can be control. The number after the hyphen indicates whether digital input is available on the device. (0- No digital Input; 1-Digital input)	**ITR830-0*04** ITR830-0*08 ITR830-0*16 ITR830-1*04 ITR830-1*08 ITR830-1*16
Gateway's communication role on communication port	This parameter is used to determine whether the Haier VRF AC Gateway and the air conditioner wired remote controller are used together. If the wired remote control is to be used, the controller must be selected as the master.	**Master** Slave
Number of connected indoor unit	It is used to determine how many indoor unit connected to device. Maksimum number depends to Product selection parameter.	**1…16**
Alive beacon state	This feature is used to determine whether the Haier VRF AC Gateway is operating. With the enabling of the module alive beacon parameter whether the device is working correctly can be known.	**Disabled** Enabled
> Alive beacon interval[1]	This parameter is used to determine the time of the module alive beacon sending data in minutes.	**00:01 – 23:59**
> Alive beacon output logic state[1]	The value "0" or "1 is sent with a period determined in "Alive beacon interval" parameter. The receipt of this telegram periodically means that the device is working properly.	**Disabled** Enabled
AC feedbacks send state	This parameter is used to get some status information on the air conditioning unit when the Haier VRF AC Gateway is started to operate. This information can be used for these purposes such as: monitoring the air conditioner from a control centre, triggering different scenarios to operate in the KNX infrastructure etc. The following describes which status information can be observed. AC Working Status (On/Off) AC Operating Mode	**Disabled** Enabled

©2024 INTERRA

	Fan Speed Setpoint Temperature	
> AC feedbacks time delay at startup[2]	This parameter is used to set the delay between the start-up and the sending of the feedback telegrams to the KNX bus line.	**00:05**…04:15 mm:ss
> AC feedbacks periodically[2]	This parameter is used to send feedback on the related objects periodically according to the time in second.	**0…255**
Behaviour after bus voltage failure	This parameter is used to determine the action that will be taken by the gateway when the KNX bus voltage failure is recovered. If there is a power interruption, one of the following options can be applied. **No Reaction:**The air conditioner returns the fabrica settings after the power failure. **Last State:** The air conditioner unit retains its last condition after the power failure. **AC ON:** The air conditioner will be switched on. **AC OFF:** The air conditioner will be switched off. **Scene:** The scene with the desired conditions from 5 different scenes can be sent to the air conditioner unit. In this case, the air conditioner unit operates under these conditions after KNX bus line power failure.	**No reaction** Last state AC ON AC OFF Scene
> Scene selection[3]	This parameter is used to determine the appropriate scene from the 5 scenes that can be created. The selected scene conditions are applied to the air conditioner and it works under these conditions after the KNX bus power failure.	**Scene 1,** Scene 2, Scene 3, Scene 4, Scene 5
Device Control Locking	This parameter is used to lock the Haier Gateway via device control locking communication object. The device is blocked and it can no longer be controlled via any telegram. The device remains in the previous status before locking until the locking is deactivated. **Lock on '0':** The Gateway will be locked when the value 0 is sent. **Lock on '1':** The Gateway will be locked when value 1 is sent.	**Disabled** Lock on '0' Lock on '1'

©2024 INTERRA

Error code (1 Bit)	This parameter is used to detect the faults that come from the air conditioner via a 1 bit value.	**Disabled** Enabled
Error code (2 Bytes)	This parameter is used to detect and identify the faults that come from the air conditioner via a 2-byte value. Each error code has a different meaning so, all of the error code descriptions are listed please check the Appendix section in this document.	**Disabled** Enabled
Error code (14 Chars)	This parameter is used to detect and identify the faults that come from the air conditioner via a 14 chars value. Each error code has a different meaning so, all of the error code descriptions are listed please check the Appendix section in this document.	**Disabled** Enabled

*1 This parameter is visible when the function “Alive beacon state” is set to “Enable”.

*2 This parameter is visible when the function “AC feedbacks send state” is set to “Enable”.

*3 This parameter is visible when the function “Behaviour after bus voltage failure” is set to “Scene”.

©2024 INTERRA

3.2. Logic Gate

This parameter page is used to make the logical relationships between inputs & output.

Fig. 8: Logic Gate Configuration Parameter Page

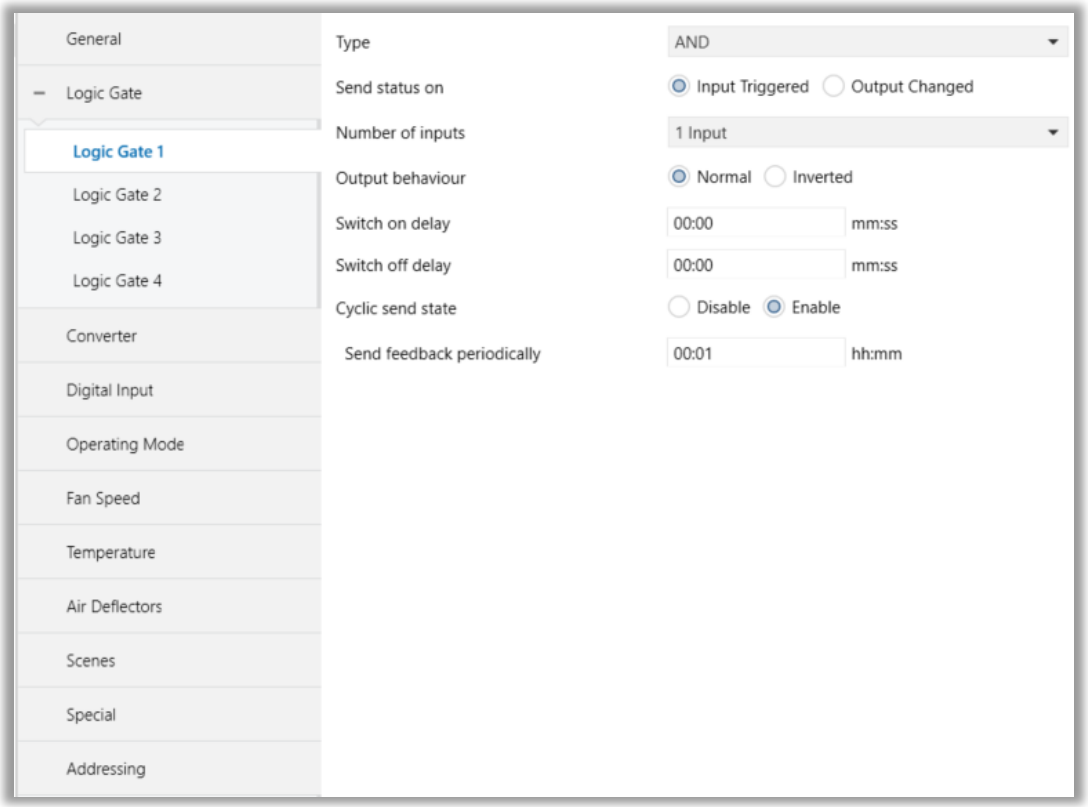

Fig. 9: Logic Gate X Configuration Parameter Page

©2024 INTERRA

Up to 4 logic gates can be used with the gateway. In addition, each logic gate allows the use of up to 4 inputs. The standard logic operations AND, OR and XOR are available.

The status of the output of logic gates can be shown normally or inverted. This configuration can be applied via the parameter “Output behaviour” and when it is parameterized as inverted, the status of the output is shown inverted.

Through the parameter “Send status on”, the type of feedback can be defined. The gateway allows sending the result of logic gates when the conversely logic output is changed or when one of the logic inputs is modified. Additionally, it is possible to define a cyclic sending of the feedback which permits getting information about the output status periodically.

The logic output can operate with previously configured delays. The logic output takes the values ON and OFF with delays. Depending on the switch delay parameters configuration, it is possible to set an ON delay (TON), and an OFF delay (TOFF) or both at the same time.

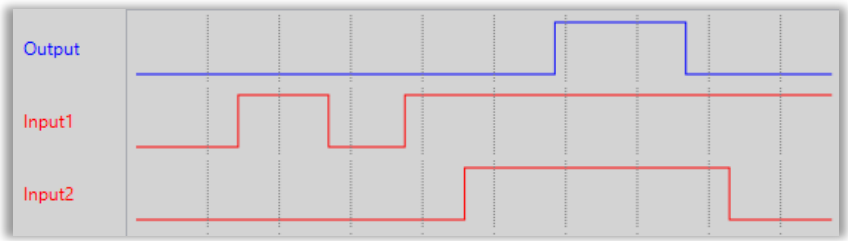

Fig. 10: Logic Gate with Delays

Special Notes

The number of logical gates can be selected up to 4. Since the characteristics of each gate are the same, only Logic 1 is described.

©2024 INTERRA

3.2.1. Parameters List

PARAMETERS	DESCRIPTION	VALUES
Number of logic gates	This parameter is used to specify the number of logic gates that are used to write logical functions. Up to 4 different logic gates can be used simultaneously.	**No logic gate** Logic Gate 1 Logic Gate 2 Logic Gate 3 Logic Gate 4
LOGIC GATE X		
Type	This parameter is used to specify the type of logical gate to be used. There are 3 different logic gate types, AND, OR and XOR. Each logical gate generates a false or true value at its output as a logical association result.	**AND** OR **XOR**
Send status on	This parameter is used to specify how the status of the output will be sent. **Input Triggered:** Output status will be sent when any logic input is received. **Output Chaged** Output status will be sent when the logic output is changed.	**Input Triggered** Output Chaged
Number of inputs	This parameter is used to specify the number of inputs for the logical gate.	**1 input** 2 inputs 3 inputs 4 inputs
Output behaviour	This parameter defines the behaviour of the logic output. **Normal:** The status of the output is sent without any modification. **Inverted:** If the value is true, the false value will be sent as a status value for the output or vice versa.	**Normal** Inverted
Switch on delay	This parameter is used to set a delay time for output behaviour. The output communication object takes the value TRUE when time reaches the configured time in this parameter.	**00:00…04:15 mm:ss**

©2024 INTERRA

Switch off delay	This parameter is used to set a delay time for output behaviour. The output takes the value FALSE when time reaches the configured time in this parameter.	**00:00…04:15 mm:ss**
Cyclic send state	This parameter is used to send feedback on the related objects periodically according to the determined time in “Send feedback peridocally” parameter.	**Disabled** Enable
>Send feedback periodically[1]	This parameters determines the LogicX output communication object sending period in minutes.	**00:01…04:15 hh:mm**

[*1] This parameter is visible when the function “Cyclic send state” is set to “Enable”.

Special Notes

The number of logical gates can be selected up to 4. Since the characteristics of each gate are the same, only one is described.

©2024 INTERRA

3.3. Converter

The main parameter settings of the Converter Parameter page are made on this page. Various control options for the Converters are enabled from this page.

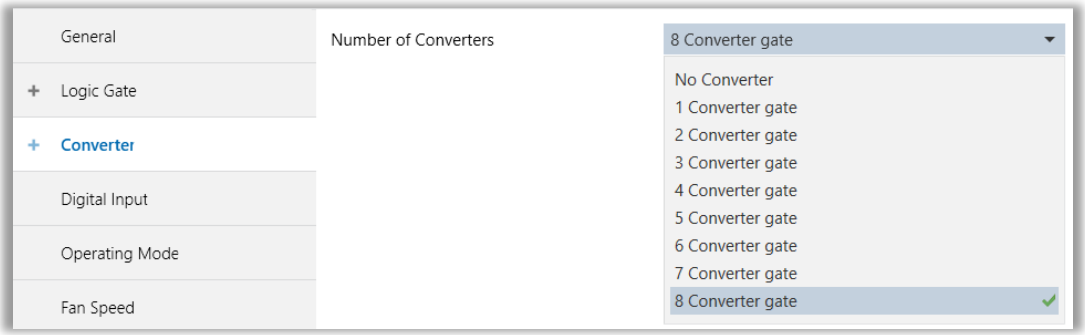

Fig. 11: Converter Configuration Parameter Page

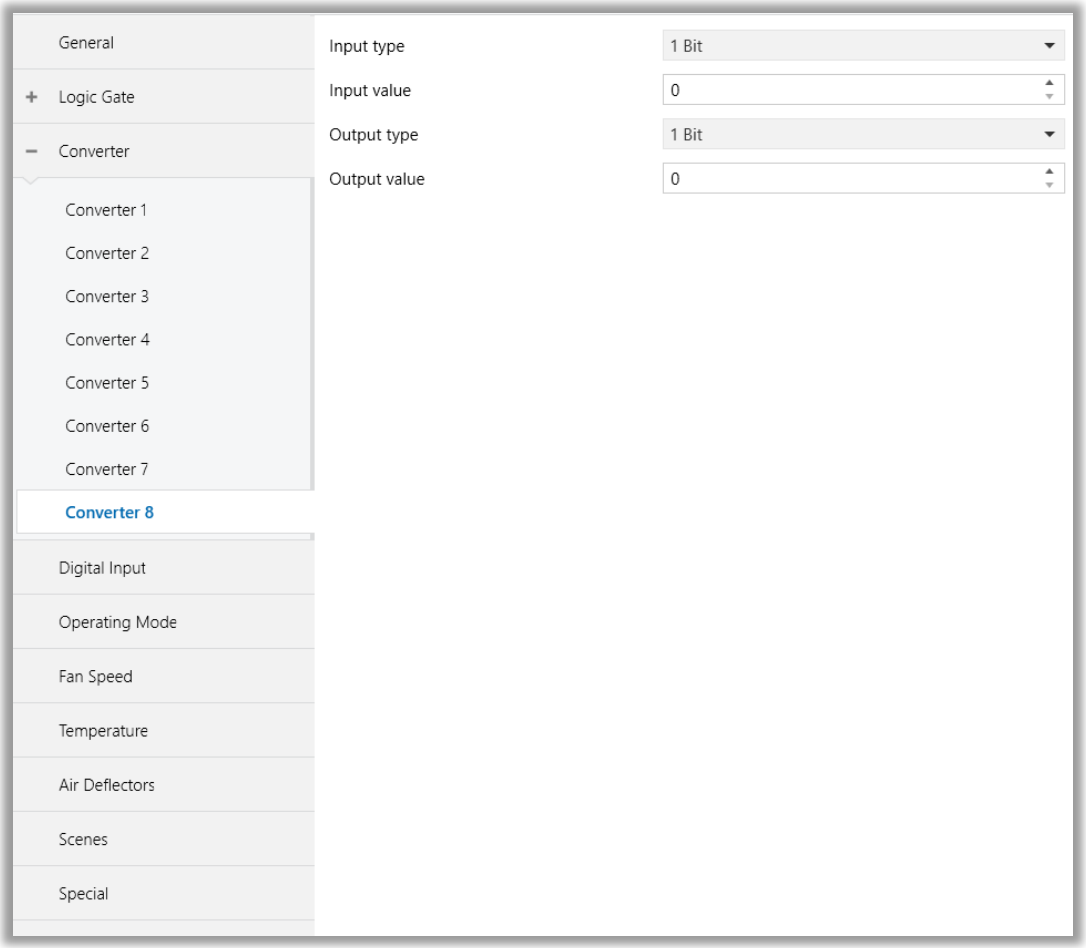

Fig. 12: Converter X Configuration Parameter Page

©2024 INTERRA

Converters are used to convert the output to configured type value depending on the input value. There are 8 different types of data input that can be converted to 4 different data values.

Moreover, if the input is selected as 1 byte or 2 bytes, you can also make the four arithmetical operations (plus, minus, multiply, divide). Some examples are shown below :

Ex 1: Input type: 1 byte, 154 Calculation: Plus Calculation value: 7 Output type: 1 byte Output = 154 + 7 Output = 161	***Ex 2:*** Input type: 1 byte, 215 Calculation: Minus Calculation value: 51 Output type: 1 byte Output = 215 - 51 Output = 164
Ex 3: Input type: 2 bytes, 862 Calculation: Multiply Calculation value: 49 Output type: 2 bytes Output = 862 x 49 Output = 42238	***Ex 4:*** Input type: 2 bytes, 46342 Calculation: Divide Calculation value: 986 Output type: 2 bytes Output = 46342 : 986 Output = 47

Special Notes

The number of Converters can be selected up to 8. Since the characteristics of each gate are the same, only one is described.

©2024 INTERRA

3.3.1. Parameters List

PARAMETERS	DESCRIPTIONS	VALUES
Number of Converters	This parameter is used to determine the number of converter gates. Each converter gate can be set independently.	**No converter** 1 Converter gate 2 Converter gate 3 Converter gate 4 Converter gate 5 Converter gate 6 Converter gate 7 Converter gate 8 Converter gate
CONVERTER X		
Input type	This parameter is used to specify the type of input value for the converter input. There are 8 different input values for each converter. When the input type is configured as 1-byte or 2- byte logic, the output data type is set as 1 bit. If the input value is non-zero, the output value will be 1. Otherwise, it will be zero.	**1 Bit** 2 Bits 1 Byte 2 Bytes 1 Byte Logic 2 Bytes Logic 1 Byte Threshold 2 Bytes Threshold
> Input value[1]	This parameter is used to set the value of the converter input. Several value types can be selected and these possible values are described below. The input type is 1 Bit: If the input type is selected as 1 bit, values are between 0-1. The input type is 2 Bits: If the input type is selected as 2 bits, values are between 0-3. The input type is 1 Byte: If the input type is selected as 1 byte, values are between 0-255. The input type is 2 Bytes: If the input type is selected as 2 bytes, values are between 0-65535.	**0**…1 **0**…3 **0**…255 **0**…65535

©2024 INTERRA

	The input type is 1 Byte logic : If the input type is selected as 1-byte logic, values are between 0-255. The input type is 2 Bytes logic : If the input type is selected as 2-byte logic, values are between 0-65535. The input type is 1 Byte Threshold : If the input type is selected as a 1-byte threshold, values are between 0-255. The input type is 2 Byte Threshold : If the input type is selected as the 2-byte threshold, values are between 0-65535.	
> Logical Operators[2]	This parameter is used to perform a mathematical operation with the input value. **Disabled:** The calculation value is disabled. The input value is converted to output value without a mathematical operation. **Plus:** The calculation value is summed with the input value and the result is applied to the output value. **Minus:** The calculation value is subtracted from the input value and the result is applied to the output value. **Multiply:** Input value and calculation value are multiplied and the result is applied to the output value. **Divide:** The input value is divided by the calculation value and the result is applied to the output value.	**Disabled** Plus Minus Multiply Divide
Calculation Value[3]	This parameter is used to specify the value to be processed along with the input value. This value type is the same as the output value type.	**0**…255 **0**…65535
Lower Limit[4]	This parameter is used to set the lower limit value of the threshold for the input when the input is configured as 1 byte or 2-byte threshold.	**0**…255 **0**…65535

©2024 INTERRA

	⚠ Lower limit value can not be higher than Upper limit value.	
Higher Limit[4]	This parameter is used to set the higher limit value of the threshold for the input when the input is configured as 1 byte or 2-byte threshold. ⚠ Upper limit value can not be lower than Lower limit value.	**0**…255 **0**…65535
Output type[1]	This parameter is used to specify the type of output value for the converter output. There are 4 different output values for each converter.	**1 Bit** 2 Bit 1 Byte 2 Byte
Output value[1]	This parameter is used to set the value of the converter output. Several value types can be selected and these possible values are described below. The output type is 1 Bit: If the input type is selected as 1 bit, values are between 0-1. The output type is 2 Bit: If the input type is selected as 2 bits, values are between 0-3. The output type is 1 Byte: If the input type is selected as 1 byte, values are between 0-255. The output type is 2 Byte: If the input type is selected as 2 bytes, values are between 0-65535.	**0**…1 **0**…3 **0**…255 **0**…65535

[*1] This parameter is visible when the function “Input type” is set to “1 Bit” or “2 Bits” or “1 Byte” or “2 Bytes”.

[*2] This parameter is visible when the function “Input type” is set to “1 Byte” or “2 Bytes”.

[*3] This parameter is visible when the function “Logical Operators” is set to “Plus” or “Minus” or “Multiply” or “ Divide”. If

[*4] This parameter is visible when the function “Input type” is set to “1 Byte Threshold” or “2 Byte Threshold”.

©2024 INTERRA

3.4. Digital Input

This function is used to perform the switching operation. Depending on the settings configured in the switching process, when the button is pressed or released, the ON or OFF values are generated. After each operation, a telegram is sent to the KNX bus line. Telegram is generated based on the configured settings.

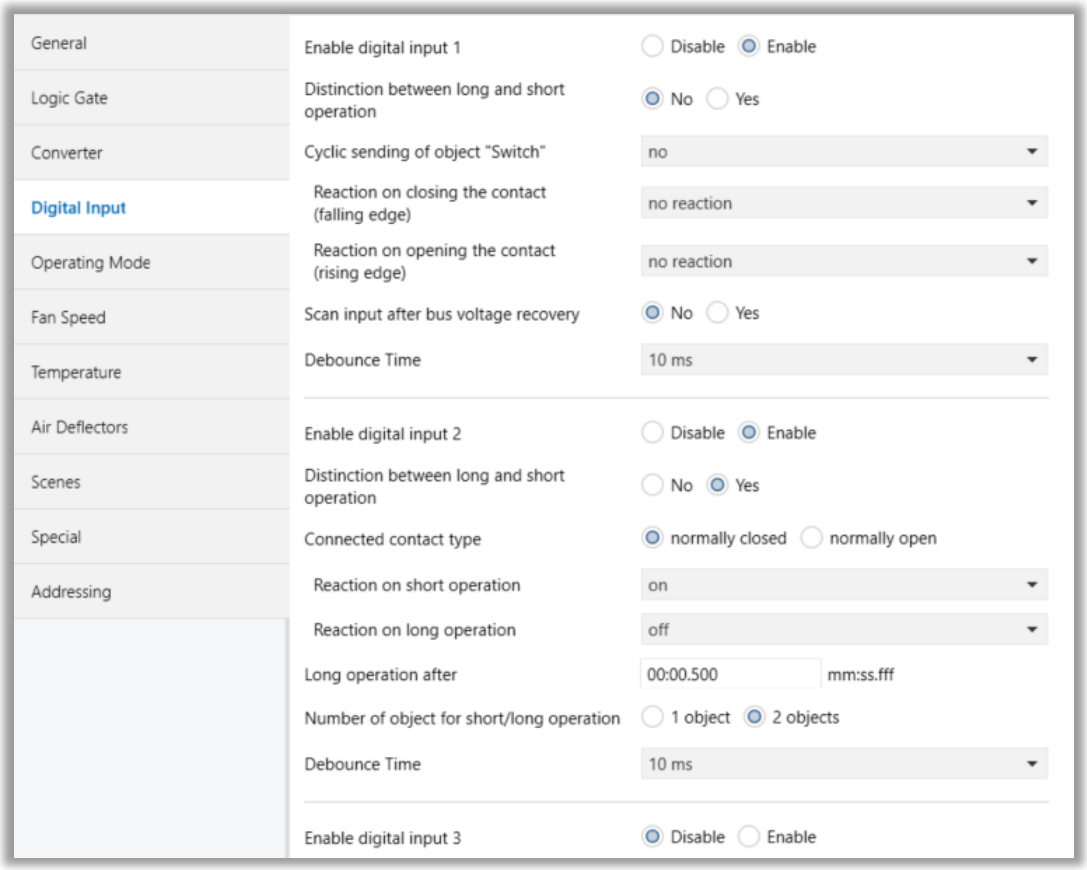

Fig. 13: Digital Input Configuration Parameter Page

©2024 INTERRA

3.4.1. Parameters List

PARAMETERS	DESCRIPTION	VALUES
Enable digital input X	This parameter is used to enable or disable the digital inputs. Other parameters will be shown when this parameter is enabled.	**Disable** Enable
Distinction between long and short operation	This parameter is used to set if the input differentiates between short and long operations. With the option “yes”, after opening/closing of the contract, it must, first of all, be ascertained if a short or long operation has occurred here. Only thereafter will a possible reaction be triggered.	**No** Yes
Cyclic sending of object “Switch”	This parameter is used to periodically send the commands to the bus line.	**No** If “Switch” = ON If “Switch” = OFF Always
-> Telegram repeated every[1]	This parameter is visible if the cyclical transmission is active. The send cycle time describes the time used between two cyclically transmitted telegrams	**00:00 … 59:59**
Reaction on closing the contact (falling edge)	This parameters is used to determine the action on state of falling edge of button.	**No reaction** On Off Toggle
Reaction on closing the contact (rising edge)	This parameters is used to determine the action on state of rising edge of button.	**No reaction** On Off Toggle
Scan input after bus voltage recovery	When the power voltage arrives, it remembers the last states of the inputs.	**No** Yes
Debounce Time	Switching time duration.	**10 ms** 20 ms 30 ms 40 ms 50 ms 70 ms 100 ms 150 ms
Connected contact type	This function is used to determine the contact type of connected switch.	**Normally closed** Normally open

©2024 INTERRA

Reaction on short operation	It is used to determine the "short press operation" when 1 bit object value has transmitted to bus.	**No reaction** On Off Toggle
Reaction on long operation	It is used to determine the "long press operation" when 1 bit object value has transmitted to bus.	**No reaction** On Off Toggle
Long operation after	This parameter is used to determine switching status as long or short. For making a long operation, the button should be pressed at least the configured value.	00:00.300 … **00:00.500** … 01.5.535
Number of object for short/long operationg	This parameter is used to determine the object count to use for short and long operations. **1 object:** short and long operations will proceed with the same object. **2 objects:** short and long operations will proceed with 2 different objects.	**1 object** 2 objects

*[1] This parameter is only visible when the parameter “Cyclic sending of object “Switch” is set to “If “Switch” = ON” or “If “Switch” = OFF” or “Always”.

©2024 INTERRA

3.5. Operating Mode

In this section, all of the parameters are corresponding to different mode properties and communication objects. Some parameters of related objects and their tasks are described below.

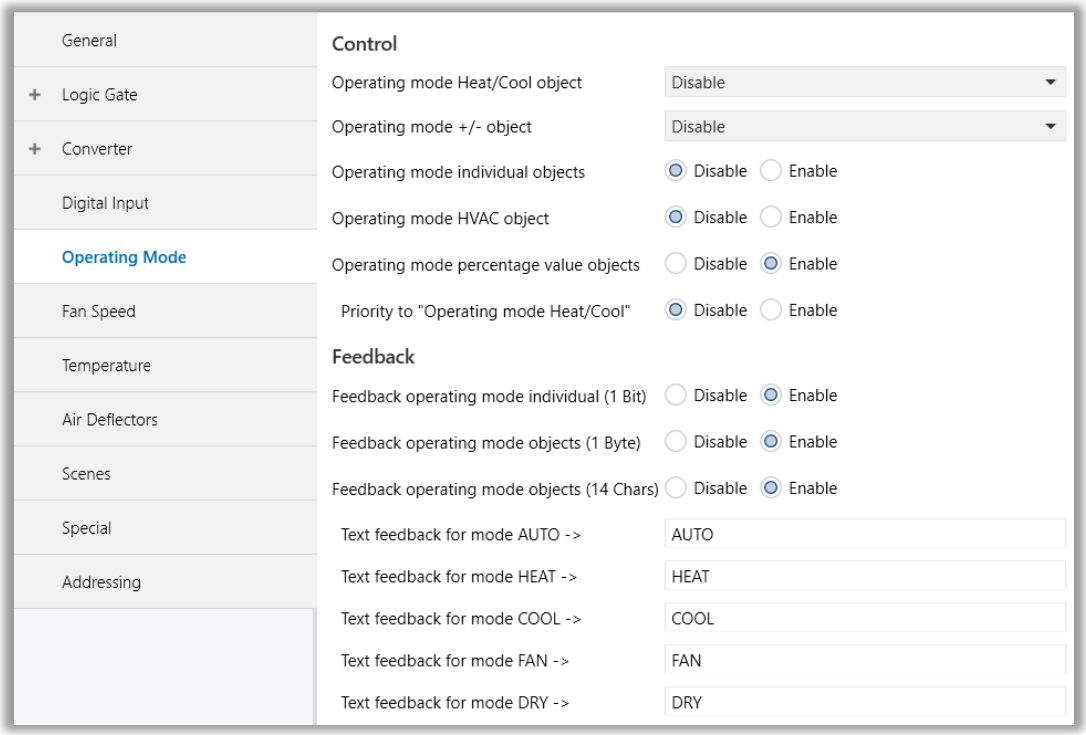

Fig. 14: Operating Mode Parameter Page

- **<u>Operating_Mode</u>:** The operating mode can be modified with these values that are shown in the table below:

OPERATING MODE	VALUE
AUTO	0
HEAT	1
COOL	3
FAN	9
DRY	14

Table 3: Operating Mode List

- **<u>Operating Mode Cool/Heat</u>:** The operating mode of the air conditioner can be selected as the heating mode or cooling mode with this 1-bit object.
- **<u>Mode Individual objects (1-bit):</u>** The operating mode can be modified by sending value 1 to the desired mode object.

©2024 INTERRA

- **Mode +/- object (1 bit)** : Using this object 5 different operating modes can be selected. The selection can be made with 1-bit values. Switching between the modes is done according to the following condition :

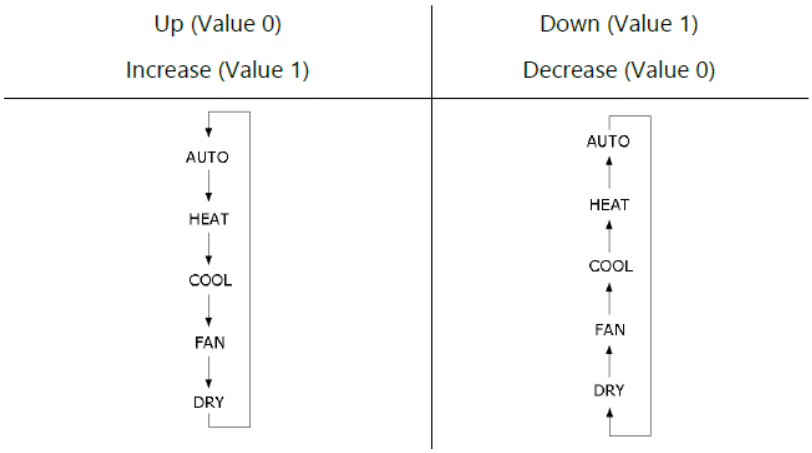

- **Mode Percent Value Objects (Mode Heating_Percentage - Mode Cooling_Percentage):** Via these 1-byte objects the indoor unit can be controlled via percentage values to provide compatibility with the thermostat that uses this data type. By using this object, there are two different options:
- Priority to “Operating mode Heat/Cool” : Disabled

  When the priority of "Operating mode Heat/Cool" is disabled, it does not matter what is the current mode of the indoor unit, the percentage values can switch the mode and activate the indoor unit in the following way:

- If the object “Mode Heating_Percentage” takes a value greater than 0, the indoor unit will be switched ON in HEAT mode. The value 0 will switch off the air conditioner.
- If the object “Mode Cooling_Percentage” takes a value greater than 0, the indoor unit will be switched ON in COOL mode. The value 0 will switch off the air conditioner.

Special Notes

When the priority is disabled and the air condition unit is working as FAN, AUTO or DRY modes, a new value to the objects “Mode Heating_Percentage - Mode Cooling Percentage” or “Operating Mode Cool/Heat” will change the mode to HEAT or COOL.

- Priority to “Operating mode Heat/Cool” : Enabled

  When the priority is enabled, the operating mode defined cannot be modified by the percentage value objects and the behaviour will be as follow:

  Actual operating mode as HEAT;

- If the object “Mode Heating_Percentage” takes a value greater than 0, the indoor unit will be switched ON. The value 0 will switch off the air conditioner.

©2024 INTERRA

- Any data received via the object “Mode Cooling_Percentage” will not be taken into consideration.

  Actual operating mode as COOL;

- If the object “Mode Cooling_Percentage” takes a value greater than 0, the indoor unit will be switched ON. The value 0 will switch off the air conditioner.
- Any data received via the object “Mode Heating_Percentage” will not be taken into consideration.

Special Notes

When the priority is enabled and the air condition unit is working as FAN, AUTO or DRY modes, a new value to the objects “Mode Heating_Percentage - Mode Cooling Percentage” will not be taken into consideration. Only a new value to the object “Operating Mode Cool/Heat” will change the mode to HEAT or COOL.

Special Notes

Any modification on all above objects will be advised in the following feedback objects:
Mode Cool/Heat Feedback
Mode Auto Feedback
Mode Heat Feedback
Mode Cool Feedback
Mode Fan Feedback
Mode Dry Feedback
Operating Mode Feedback
Operating Mode Text Feedback

Special Notes

When the working mode communication object has set, this command will be valid when AC working status is ON.

©2024 INTERRA

3.5.1. Parameters List

PARAMETERS	DESCRIPTION	VALUES
Operating mode Heat/Cool object	This parameter is used to enable or disable the operating mode heat/cool and its feedback objects. **Normal:** If value 1 is sent via a related object, the air conditioner switches to heat mode. **Inverted:** If value 1 is sent via a related object, the air conditioner switches to cool mode.	**Disabled** Normal Inverted
Operating mode +/- object	This parameter is used to enable or disable the operating mode +/- object. **0:Decrease;1:Increase:** If the value 1 is sent, the modes switch according to the following sequence Auto->Heat->Cool->Fan->Dry **0:Up;1:Down:** If the value 0 is sent, the modes switch according to the following sequence Auto->Heat->Cool->Fan->Dry	**Disabled** 0:Decrease;1:Increase 0:Up;1:Down
Operating mode individual objects	This parameter is used to enable the operating modes individual objects. These objects are : ->Mode Heat ->Mode Cool ->Mode Auto ->Mode Fan ->Mode Dry	**Disabled** Enabled
Operating mode HVAC object	This parameter is used to enable or disable operating mode objects. Via this object, if the specified values are sent to the corresponding mode the operating mode is switched to that mode.	**Disabled** Enabled
Operating mode percentage value objects	This parameter is used to enable the percent value objects of heating mode and cooling mode.	**Disabled** Enabled
> Priority to "Operating mode Heat/Cool"[1]	This parameter is used to enable or disable the giving priority to operating mode Heat/Cool.	**Disabled** Enabled

©2024 INTERRA

Feedback operating mode individual objects (1 Bit)	This parameter is used to enable or disable the feedback objects of individual operating mode objects. If this parameter is enabled, all of the individual feedback objects of operating modes are visible.	**Disabled** Enabled
Feedback operating mode objects (1 Byte)	This parameter is used to enable or disable the 1 Byte feedback object of the operating mode. According to special values, the operating mode can be easily detected.	**Disabled** Enabled
Feedback operating mode text object (14 Chars)	This parameter is used to enable or disable the feedback operating text mode objects.	**Disabled** Enabled
-> Text feedback for mode AUTO[2]	This parameter is used to type a special name for the operating mode AUTO feedback text object.	-
-> Text feedback for mode HEAT[2]	This parameter is used to type a special name for the operating mode HEAT feedback text object.	-
-> Text feedback for mode COOL[2]	This parameter is used to type a special name for the operating mode COOL feedback text object.	-
-> Text feedback for mode FAN[2]	This parameter is used to type a special name for the operating mode FAN feedback text object.	-
-> Text feedback for mode DRY[2]	This parameter is used to type a special name for the operating mode DRY feedback text object.	-

*[1] This parameter is only visible when the parameter “Operating mode percentage value objects” is set to “Enabled”.

*[2] This parameter is only visible when the parameter “Feedback operating mode text object (14 Chars)” is set to “Enabled”.

©2024 INTERRA

3.6. Fan Speed

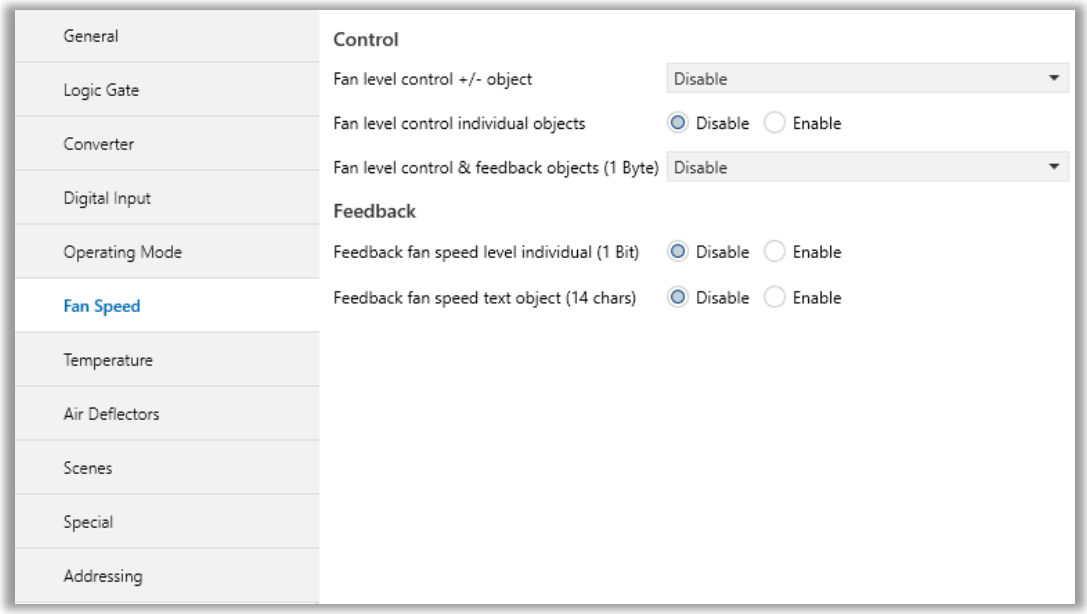

Fig. 15: Fan Speed Configration Parameter Page

Fan Speed Enumerated/Scaling: The fan speed can be driven by "numbered or scaled object," selectable by the parameter "Fan level control & feedback objects (1 byte)".

Fan speed Enumerated object can control fan speed of air conditioner via 1 byte object.

FAN SPEED	VALUE
FAN AUTO	0
FAN 1	1
FAN 2	2
FAN 3	3
FAN 4	4
FAN 5	5

Table 4: Fan Speed - Enumarated Value Table

Fan Speed Scaling object can control the fan speed of the air conditioner according to the value range of predefined parameters.

Example:
If “Fan Speed Scaling” communication object value has given 18%, fan level set to Fan speed 1

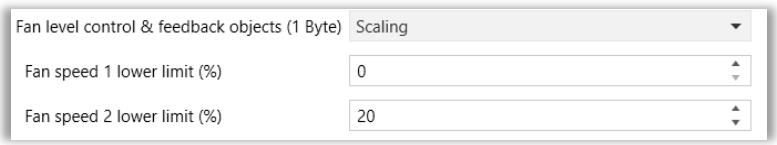

Fig. 16: Fan Speed Scaling Configuration

©2024 INTERRA

- **Fan Speed Individual objects (1-bit):** The fan speed of the air conditioner can be selected as the speed auto to 5 with this 1-bit object. When the "Fan Speed Auto Control" object is deactivated, fan speed returns to the previous position before activated that object.
- **Fan Speed +/- object:** Using this object 6 different fan speeds can be selected. The selection can be made with 1-bit values. Switching between the fan speed depends to selected parameters.

  *If the "Loop the sequence" parameter is enabled, the loop changes according to the state of the "Include AUTO fan mode in the sequence" parameter. If the " Include AUTO fan mode in the sequence " parameter is enabled, the increment after Fan speed 5 sets the fan speed level to AUTO. Subsequent increments continue arithmatically.

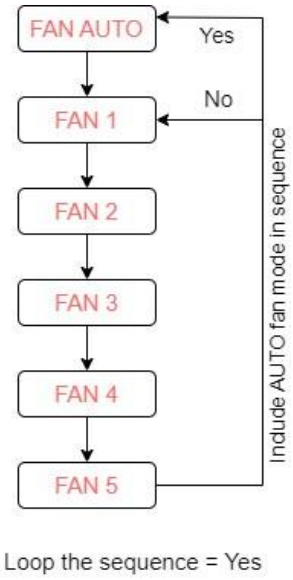

Special Notes
If a value greater than 5 is received, this data will be accepted and the fan will set at the maximum speed.

Special Notes
Any modification on all above objects will be advised in the following feedback objects: **Fan Speed Enumerated Feedback** **Fan Speed Auto Feedback** **Fan Speed 1 Feedback,** **Fan speed 2 Feedback** **Fan speed 3 Feedback** **Fan speed 4 Feedback** **Fan speed 5 Feedback** **Fan Speed Text Feedback**

©2024 INTERRA

3.6.1. Parameters List

PARAMETERS	DESCRIPTION	VALUES
Fan level control +/- object	This parameter is used to enable or disable the fan level control +/- object. **Normal (1:Increase/0:Decrease):** If the value 1 is sent, the fan levels switch according to the following sequence Auto->Fan Level 1-> … -> Fan Level 5 **Inverted (0:Up/1:Down):** If the value 1 is sent, the fan levels switch according to the following sequence Fan Level 5-> … ->Fan Level 1->Auto	**Disabled** Normal Inverted
> Include AUTO fan mode in the sequence[1]	This parameter is used to add AUTO fan mode to fan levels.	**No** Yes
> Loop the sequence[1]	This parameter is used to enable or disable the fan level sequence repeating considering the selected parameter polarity.	**No** Yes
Fan level control individual objects	This parameter is used to enable or disable the fan level control individual objects. For each fan speed level, there is an individual fan speed object. These objects are: Fan Speed 1 Control Fan Speed 2 Control Fan Speed 3 Control Fan Speed 4 Control Fan Speed 5 Control Fan Speed Auto Control	**Disabled** Enabled
Fan level control & feedback objects (1 Byte)	This parameter is used to determine the fan level control type with 1-byte communication objects **Scaling:** Via scaling object, according to the threshold defined in parameters fan speed will be determined. **Enumerated:** Via enumerated object, if value 0 is sent fan level will be fan speed auto. Likewise, value 2 causes fan speed 2 and value 3 causes fan speed 3 etc.	**Disabled** Scaling Enumerated

©2024 INTERRA

> Fan speed 1 lower limit (%)[2]	This parameter is used to set the lower limit 1 fan level threshold value to compare with the received value from the KNX bus line. After comparison, the corresponding fan speed will be chosen.	**0**…100
> Fan speed 2 lower limit (%)[2]	This parameter is used to set the lower limit 2 fan level threshold value to compare with the received value from the KNX bus line. After comparison, the corresponding fan speed will be chosen.	**0**…100
> Fan speed 3 lower limit (%)[2]	This parameter is used to set the lower limit 3 fan level threshold value to compare with the received value from the KNX bus line. After comparison, the corresponding fan speed will be chosen.	**0**…100
> Fan speed 4 lower limit (%)[2]	This parameter is used to set the lower limit 4 fan level threshold value to compare with the received value from the KNX bus line. After comparison, the corresponding fan speed will be chosen.	**0**…100
> Fan speed 5 lower limit (%)[2]	This parameter is used to set the lower limit 5 fan level threshold value to compare with the received value from the KNX bus line. After comparison, the corresponding fan speed will be chosen.	**0**…100
Feedback fan speed level individual (1 Bit)	This parameter is used to enable or disable the individual fan level object feedbacks.	**Disabled** Enabled
Feedback fan speed text object (14 chars)	This parameter is used to enable or disable the feedback fan level text object.	**Disabled** Enabled
-> Text feedback for mode Fan Auto[3]	This parameter is used to type a special name for Auto mode text feedback.	-
-> Text feedback for mode Fan Speed 1[3]	This parameter is used to type a special name for fan speed 1 text feedback.	-
-> Text feedback for mode Fan Speed 2[3]	This parameter is used to type a special name for fan speed 2 text feedback.	-
-> Text feedback for mode Fan Speed 3[3]	This parameter is used to type a special name for fan speed 3 text feedback.	-
-> Text feedback for mode Fan Speed 4[3]	This parameter is used to type a special name for fan speed 4 text feedback.	-
-> Text feedback for mode Fan Speed 5[3]	This parameter is used to type a special name for fan speed 5 text feedback.	-

*[1] This parameter is only visible when the parameter “Fan level control +/- object” is set to “Normal” or “Inverted”.
*[2] This parameter is only visible when the parameter “Fan level control & feedback objects (1 Byte)” is set to “Scaling”.
*[3] This parameter is only visible when the parameter “Feedback fan speed text object (14 Chars)” is set to “Enabled”.

©2024 INTERRA

3.7. Air Deflectors

On this parameter page, all the parameters are related to the air deflector properties and communication objects. The parameter “Air deflector control” defines if the air deflector control is available in the indoor unit. If this parameter is set to “Disable”, all the fan parameters and objects are hidden.

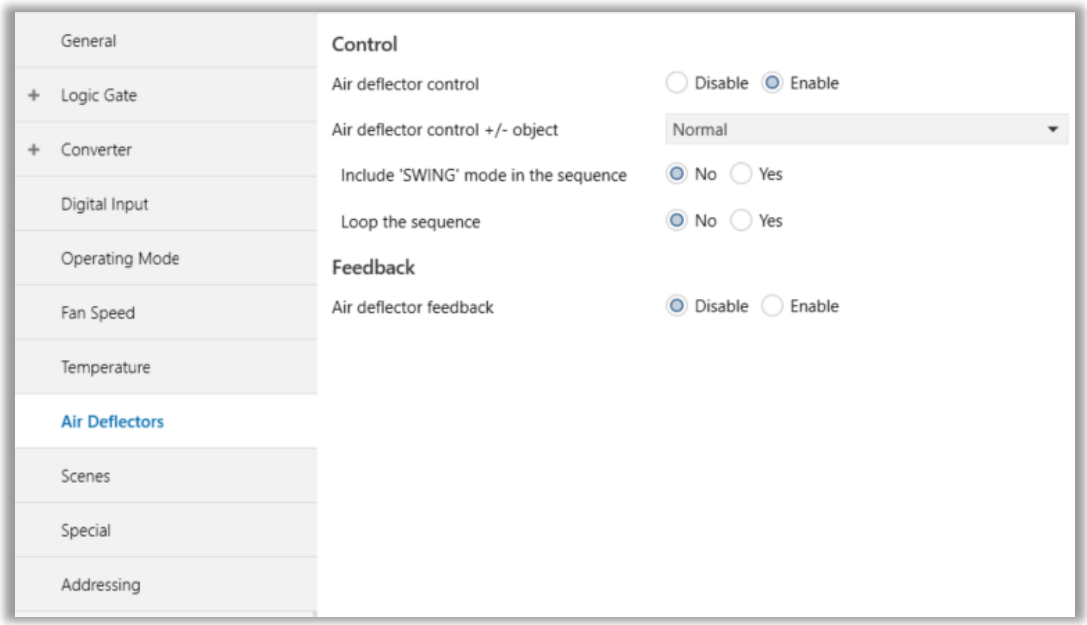

Fig. 17: Air Deflector Configuration Parameter Page

©2024 INTERRA

Air Deflector Control:

The air deflector position can be set via some different methods:

- Air deflector position can be controlled by sending 1-bit values via “Air Deflector +/-“ object. While using this method the following sequence is applied:

Loop the sequence: Yes		Loop the sequence: No	
Up (Value 0) **Increase (Value 1)**	Down (Value 1) Decrease (Value 0)	Up (Value 0) Increase (Value 1)	Down (Value 1) Decrease (Value 0)
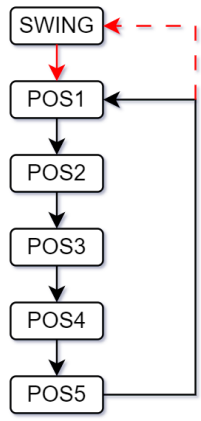	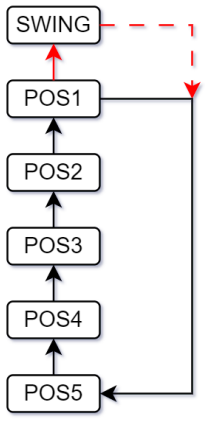	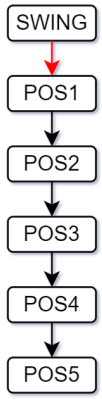	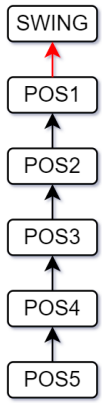
Include ‘SWING’ mode is in the sequence = Yes			

- Air deflector positions can be controlled by sending the numbers of each position: 1, 2, 3, 4 or 5 via “Air Deflector Broadcast Value” communication objects.

Special Notes
If a value greater than 5 , this data will be discarded and the vanes will remain in the current position.

Special Notes
Any modification on all above objects will be advised in the following feedback object: Air Deflector Feedback

©2024 INTERRA

3.7.1. Parameters List

PARAMETERS	DESCRIPTION	VALUES
Air deflector control	This parameter is used to enable or disable the ar deflector control function. If this parameter is selected as Enable, all of the air deflector parameters will be visible and air deflector can be control via 1 Byte communication object. Via 1 Byte object, if value 1 is sent air deflector position will be position 1. Likewise, value 2 causes air deflector position 2 and so on.	**Disable** Enable
Air deflector control +/- object	This parameter is used to enable the air deflector control object to change the desired air deflector position. **1:Increase/0:Decrease:** If the value 1 is sent, the air deflector position switches according to the following sequence Swing->Pos 1->Pos 2->Pos 3->Pos 4->Pos 5. **0:Up/1:Down:** If the value 0 is sent, the air deflector position switches according to the following sequence Swing->Pos 1->Pos 2->Pos 3->Pos 4->Pos 5.	**Disabled** 1:Increase/0:Decrease 0:Up/1:Down
> Include 'SWING' mode in the sequence[1]	This parameter is used to include the SWING function in the air deflector position sequence. If air deflector position is selected as 1, the SWING feature will come from before the pos 1 in the sequence.	**No** Yes
> Loop the sequence[1]	This parameter is used to control the sequence in a loop. According to air deflector position +/- object configuration polarity, the sequence will be repeated.	**No** Yes
Air deflector feedback	This parameter enables feedback object.	**Disabled** Enable

*[1] This parameter is only visible when the parameter "Air deflector control +/- object" is set to "Normal" or "Inverted".

©2024 INTERRA

3.8. Temperature

In this section, all of the parameters are corresponding to the setpoint temperature and ambient temperature. Some parameters of related objects and their tasks are described in this part.

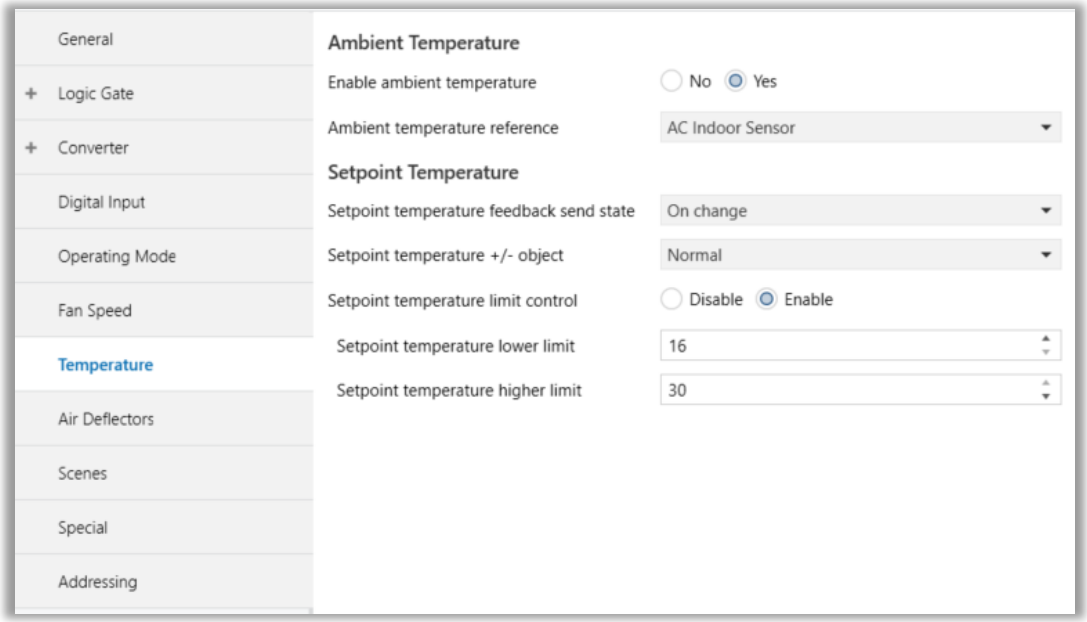

Fig. 18: Temperature Configuration Parameter Page

Ambient Temperature:

The air conditioner indoor unit can display the temperature information via the "Ambient Temperature Feedback" object when “Enable ambient temperature” parameter has selected as “No”. However, it is also possible to receive the measurement of the measured ambient temperature from KNX by enabling the parameter “Ambient temperature reference” as KNX bus. If there is no KNX device to send ambient temperature to bus, it is also possible to send temperature via “External temperature sensor”.

Enable ambient temperature:

When this parameter has not enabled, air conditioner read ambient temperature from indoor unit sensor and sends sensor value to KNX bus according to state of “Ambient temperature feedback send state” parameter.

When the parameter has enabled, temperature reference can selected as “KNX bus” or ““External temperature sensor”.

“KNX bus” selection allow to send room temperature to air conditioner over KNX bus.

“External temperature sensor” selection allow to read ambient temperature from sensor that connected to device externally. The temperature sensor must be connected to device with 2 wire socket on device. The temperature sended to air conditioner can be observed via “Ambient temperature feedback send state” parameter as Periodically, On change or both condition.

©2024 INTERRA

Special Notes

Ambient Temperature can be sent at 30-second intervals to avoid communication congestion on the KNX bus and only integer value changes are valid.

Special Notes

When the "Enable ambient temperature" parameter has enabled if there is no ambient temperature coming from KNX bus through 5 mins, the device select ambient temperature reference as "AC indoor sensor temp" until ambient temperature value sends over KNX again. Temperature value readed from indoor unit can be observed in KNX bus.

Setpoint Temperature:

"Setpoint Temperature Control" object is always enable. Feedback of this object can be disabled or enabled via "Setpoint temperature feedback send state" parameter. The temperature sended to air conditioner can be observed via "Setpoint temperature feedback send state" parameter as Periodically, On change or both condition.

Via the parameter "Limits for setpoint control," it is possible to enable a range for the setpoint to be modified. By enabling this option, the minimum and maximum setpoints available to send via KNX will be defined in the parameters "Setpoint lower limit" and "Setpoint higher limit". By disabling this option, per default, the lower and higher limits will be limits of the air condition unit.

Via the object "Setpoint Temperature +/-" the setpoint temperature can be modified via a 1-bit object as follow:

- By sending "Up" (Value 0) or "Increase" (Value 1): The setpoint temperature will be increased by steps of 1ºC until air condition unit limit or defined higher limit value.
- By sending "Down" (Value 1) or "Decrease" (Value 0): The setpoint temperature will be decreased by steps of 1ºC until the air condition unit lower the limit value.

Special Notes

When the "Setpoint temperature limit control" parameter has enabled, It only valid while using communication object. This parameter does not valid setpoint temperature defined in scene or others.

©2024 INTERRA

3.8.1. Parameters List

PARAMETERS	DESCRIPTION	VALUES
Enable ambient temperature	**No** Ambient temperature reference has selected from indoor unit sensor. **Yes** Ambient temperature reference can be selected as “AC Indoor Sensor”, “KNX bus” and “External temperature sensor”.	**No** Yes
Ambient temperature reference	**AC Indoor Sensor** Ambient temperature reference has seleceted from indoor unit sensor. **KNX bus** Ambient temperature supplied from KNX. **External temperature sensor** Ambient temperature supplied from temperature sensor connected to device.	**AC Indoor Sensor** KNX bus External temperature sensor
> Ambient temperature feedback send state[1,2]	This parameter enables the sending of internal temperature value information. **Disabled:** Temperature information is not sent. **Periodically:** Temperature information is sent periodically. **On change:** Temperature information is sent when there is a change in the temperature value. **Periodically and on change**: Temperature information is sent periodically and when there is a change in the temperature value.	**Disabled** Periodically On change Periodically and on change
> Feedback sending period[2,3]	This parameter sets the sending period of the internal temperature value in seconds.	**00:05 .. 04:15**
Setpoint temperature feedback send state	This parameter allows the setpoint temperature sent to the air conditioner or the current setpoint temperature to be sent to the KNX line. **Disabled:** Temperature information is not sent. **Periodically:** Temperature information is sent periodically. **On change:** Temperature information is sent when there is a change in the temperature value.	**Disabled** Periodically On change Periodically and on change

©2024 INTERRA

	Periodically and on change: Temperature information is sent periodically and when there is a change in the temperature value.	
> Feedback sending period[4]	This parameter sets the sending period of the setpoint temperature value in seconds.	**00:05 .. 04:15**
Setpoint control +/- object	This parameter enables to change of the desired temperature value as +/- with the 1-bit object. **Normal:** Setpoint temperature value increases when sended "1" **Inverted:** Setpoint temperature value increases when sended "0"	**Disabled** Normal Inverted
Setpoint temperature limit control	This parameter enables limits for the setpoint temperature value.	**Disabled** Enabled
> Setpoint temperature lower limit[5]	This parameter activates a lower limit for the setpoint temperature value.	**16**…25
> Setpoint temperature higher limit[5]	This parameter activates a higher limit for the setpoint temperature value.	20…**30**

*[1] This parameter is only visible when the parameter "Enable ambient temperature" is set to "No".
*[2] This parameter is only visible when the parameter "Ambient temperature reference" is set to "External temperature sensor".
*[3] This parameter is only visible when the parameter "Ambient temperature feedback send state" is set to "Periodically" or "Periodically and on change".
*[4] This parameter is only visible when the parameter "Setpoint temperature feedback send state" is set to "Periodically" or "Periodically and on change".
*[5] This parameter is only visible when the parameter "Setpoint temperature limit control" is set to "Enabled".

©2024 INTERRA

3.9. Scenes

On this parameter page, up to 5 different scenarios can be configured. Each scene functions are identical and the configuration of each scene permits:

- The number of scenes (Between 1-64) can be assigned.
- The air condition unit's on/off values can be set.
- The air condition unit's AC mode can be configured.
- Fan levels of the related scene can be specified.
- The setpoint temperature can be set of the scene.
- The scene can be stored by enabling the storage function.
- Delay time can be specified for starting the scene.

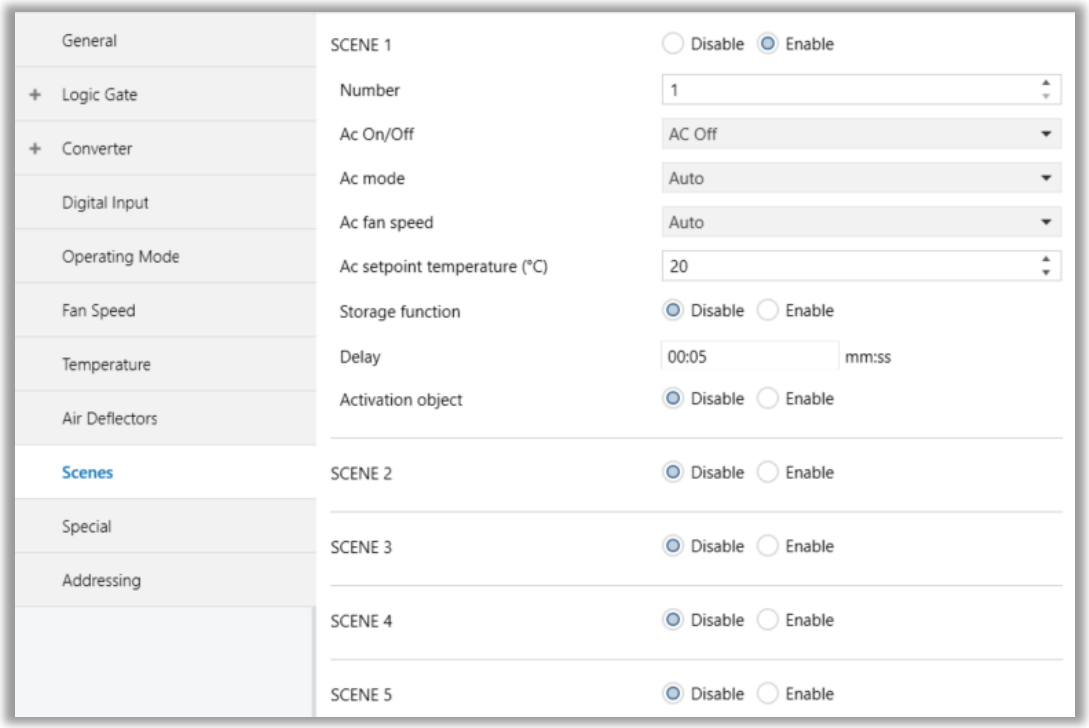

Fig. 19: Scenes Configuration Parameter Page

Via the object "Scene", telegrams that contents the call or store functions of a scene are sent. Up to 1...64 scenario numbers can be selected for 5 scenarios via a single group address. The scenario number telegram must match the pre-configured scenario number in the parameters.
The scene number (1-64), is used to recall the scene via the corresponding object. For storage of the scene, the value sent via the object "Scene" must be 128+scene number. The recall of each scene can be delayed whether a time delay has been previously defined in the parameter window.

Special Notes	
	After ETS programming, the scene values parameterized for the output concerned will be overwritten into the gateway. It means that any change made by the user will be deleted. Therefore, it is important, before any maintenance, to know the previous scene configuration and whether the user wants to keep operating with that configuration.

©2024 INTERRA

3.9.1. Parameters List

PARAMETERS	DESCRIPTION	VALUES
Scene X	This parameter is used to enable or disable the related scenario.	**Disable** Enable
> Number	This parameter is used to specify the scene number of the corresponding scene.	**1**…64
> AC On/Off	This parameter is used to determine the on/off status of the air condition unit for the selected scenario.	**AC Off** AC On No Change
> AC mode	This parameter is used to specify the mode of the air condition unit for the selected scenario.	**Auto** Heating Cooling Fan Dry No Change
> AC Fan level	This parameter is used to specify the fan level of the air condition unit for the selected scenario.	**Auto** Level 1 Level 2 Level 3 Level 4 Level 5 No Change
> AC setpoint temperature(°C)	This parameter is used to specify the setpoint temperature of the selected scenario.	16℃…30℃
> Storage function	This parameter is used to save the selected scenario.	**Disable** Enable
> Delay	This parameter is used to set a delay time for starting the selected scene.	**00:05 .. 04:15**
> Activation object	This parameter is used to enable or disable the activation object to activate the scenario.	**Disable** Enable

©2024 INTERRA

3.10. Special

In this section, special functionalities of the gateway are described. The gateway has 4 different functions for special purposes. Each of them is explained in separate subtitles.

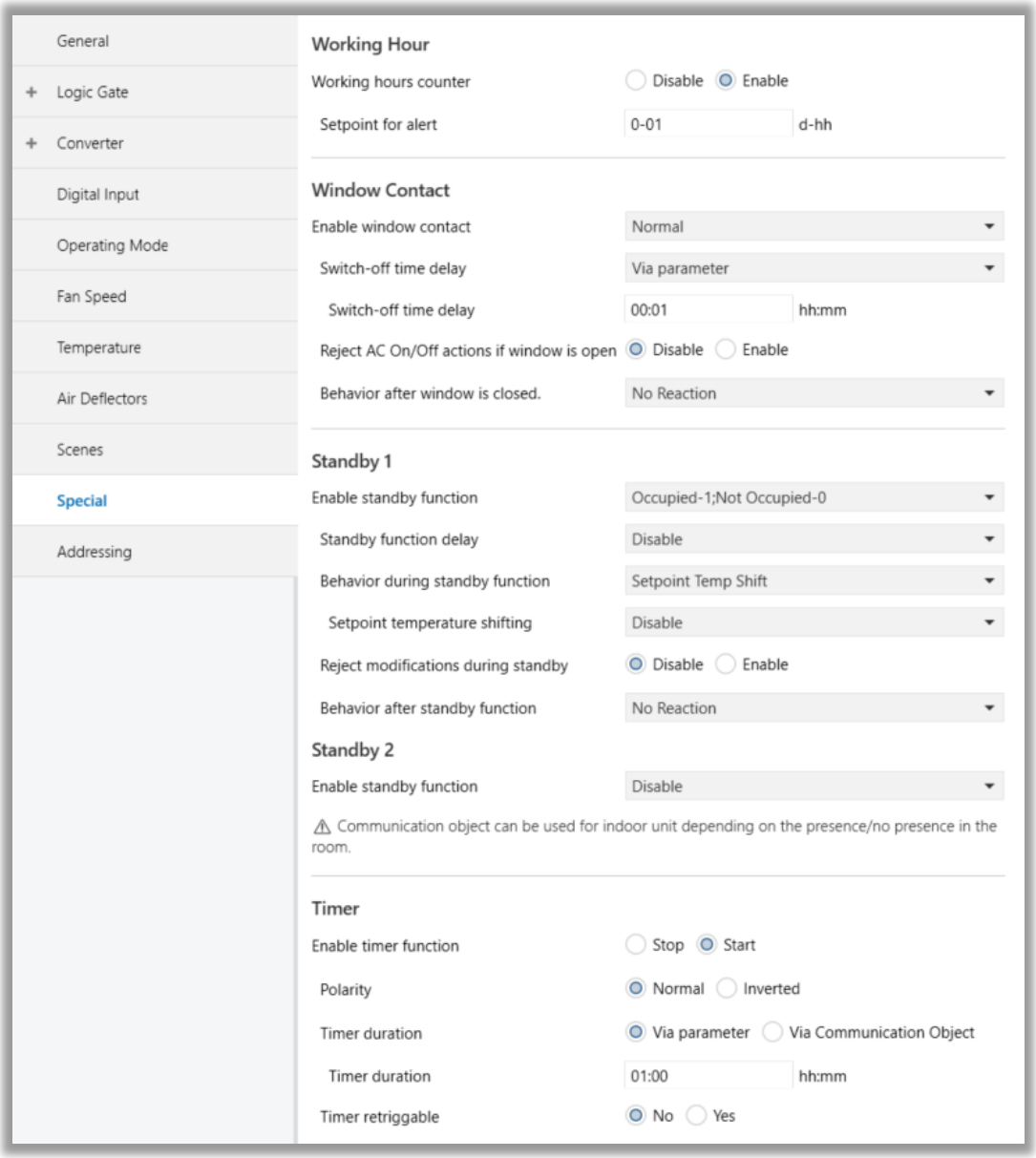

Fig. 20: Special Configuration Parameter Page

©2024 INTERRA

***Working Hour*:** This function is used to know the air conditioner's operating hour as "ON" position. When the "ON" status of the air condition unit is counted for one hour, the object value increases. The counter is available to create an alert to warn the user after the desired time later. The counter can be reset via the "Reset Hours Counter" object.

***Window Contact*:**This function is used for window contacts to determine the operation type when the window contacts are open or close. When the "window is open" information is received, it is possible to switch off the air condition unit or activate any predefined scene. However, it is possible to specify a delay time for the operation type to be started or to restrict the On / Off action of the air condition unit. After incoming "window contacts are closed" information, the behaviour of the air condition unit can be selected as one of the predefined scenarios, OFF or the previous state of this function.

***Standby Function*:** This function is used to activate the standby modes for the air condition unit to determine the operation type for the standby modes. During standby function, it is possible to make setpoint shifting, activate any predefined scene or switch off the air condition unit. However, it is possible to specify delay time for operation type to be started or to reject modifications for the air condition unit during standby function. After incoming standby function stop information, the behaviour of the air condition unit can be selected as one of scenario, off or the previous state. Additionally, a secondary standby function is available and the same parameters and object are valid for the secondary standby function.

***Timer Function*:**The timer function switches off the air condition unit after a defined time. Polarity and durations can be determined via sub-parameters of this function. The timer function is also retriggerable and when timer retrigger is enabled, the timer restarts itself for counting for switch off the air condition unit.

©2024 INTERRA

3.10.1. Parameters List

PARAMETERS	DESCRIPTION	VALUES
Working Hour	This parameter is used to enable or disable the working hours counter function.	**Disable** Enable
> Setpoint for alert[1]	This parameter is used to set a setpoint alarm point for the working hours counter of the air conditioner unit.	**0-01 … 9-23** d-hh
Enable window contact	This parameter is used to enable or disable the air conditioner unit's window contact function. **Normal:** 0-Opened;1-Closed **Inverted:** 0-Closed;1-Opened	**Disable** Normal Inverted
> Switch-off time delay[2]	This parameter is used to specify the switch-off time delay that is sent via parameter or communication object.	**Disable** Via parameter Via communication object
> Switch-off time delay[2,3]	This parameter is used to set delay time in minutes to switch off the air conditioner.	**00:01 … 04-15** hh:mm
> Reject AC On/Off actions if window is open[2]	This parameter is used to reject on & off actions of the air conditioner unit's when the window is opened.	**Disable** Enable
> Behaviour after window is closed.[2]	This parameter is used to specify the behaviour after window is closed. For instance, one of the configured scenarios can be operated, the conditioner unit is turned off or the last state is maintained.	**No Reaction** Last State AC ON AC OFF Scene
> After window is closed scene.[2,4]	This parameter is used to activate defined scene if "Behaviour after window is closed" parameter is selected as "Scene"	**Scene 1** Scene 2 Scene 3 Scene 4 Scene 5

©2024 INTERRA

Enable standby function	This parameter is used to enable or disable the standby function. **Occupied-1;Not occupied-0:** According to occupied or not occupied status, configurations can be made. This can be used for indoor unit depending on the presence/ no presence in the room. **Start-1;Stop-0:** This function is used in order to activate standby function.	**Disabled** Occupied-1;Not occupied-0 Start-1;Stop-0
> Standby function delay[5]	This parameter is used to specify the standby function delay that is sent via parameter or communication object.	**Disable** Via parameter Via communication object
> Standby function delay[6]	This parameter is used to set a delay time in minutes for the standby function.	**00:01 … 04-15** hh:mm
> Behaviour during standby function[5]	This parameter is used to configure the behaviour during the standby function. For instance, one of the configured scenarios can be operated, the conditioner unit is turned off or the last state is maintained.	**Setpoint shifting** Off Scene
> Standby function scene[6]	This parameter is used to activate defined scene if “Behaviour during standby function” parameter is selected as “Scene”	Scene 1 Scene 2 Scene 3 Scene 4 Scene 5
> Setpoint temperature shifting (℃)[7]	This parameter is used to specify the setpoint shifting that is sent via parameter or communication object.	**Disable** Via parameter Via communication object
> Setpoint temperature shifting (℃)[8]	This parameter is used to set the setpoint shifting temperature value.	0…5
> Reject modifications during standby function[5]	This parameter is used to enable or disable the reject modifications during the standby function. If this parameter is enabled, no modifications can be allowed in standby mode. User can not sends command to air conditioner.	**Disable** Enable

©2024 INTERRA

> Behaviour after standby function[5]	This parameter is used to configure the behaviour during the standby function. For instance, one of the configured scenarios can be operated, the conditioner unit is turned off or the last state is maintained.	**No reaction** Last state AC ON AC OFF Scene
> Standby function scene[6]	This parameter is used to activate defined scene if "Behaviour after standby function" parameter is selected as "Scene"	Scene 1 Scene 2 Scene 3 Scene 4 Scene 5
Enable timer function	This parameters is used for start or stop timer function.	**Stop** Start
> Polarity[9]	This parameter is used to specify the polarity of enabling command the timer function. **Normal:** 0-Stop; 1-Start **Inverted:** 0-Start; 1-Stop	**Normal** Inverted
> Timer duration[9]	This parameter is used to specify the timer duration that is sent via parameter or communication object.	**Via parameter** Via communication object
> Timer duration[10]	This parameter is used to set delay time in minutes for the timer function.	**00:01… 23:59 hh:mm**
> Timer retriggerable[9]	This parameter is used to restart the timer.	**No** Yes

*[1] This parameter is only visible when the parameter "Working Hour" is set to "Enable".
*[2] This parameter is only visible when the parameter "Enable window contact" is set to "Normal" or "Inverted".
*[3] This parameter is only visible when the parameter "Switch-off time delay" is set to "Via parameter".
*[4] This parameter is only visible when the parameter "Behaviour after window is closed" is set to "Scene".
*[5] This parameter is only visible when the parameter "Enable standby function" is set to "Occupied-1;Not occupied-0" or "Start-1;Stop-0".
*[6] This parameter is only visible when the parameter "Behaviour during standby function" is set to "Scene".
*[7] This parameter is only visible when the parameter "Behaviour during standby function" is set to "Setpoint shifting".
*[8] This parameter is only visible when the parameter "Setpoint temperature shifting (℃)" is set to "Via parameter".
*[9] This parameter is only visible when the parameter "Enable timer function" is set to "Start".
*[10] This parameter is only visible when the parameter "Timer duration" is set to "Via parameter".

©2024 INTERRA

3.11. Addressing

Air conditioner indoor unit address must be defined in this section. Depends to “Number of connected indoor unit” parameter in General page.

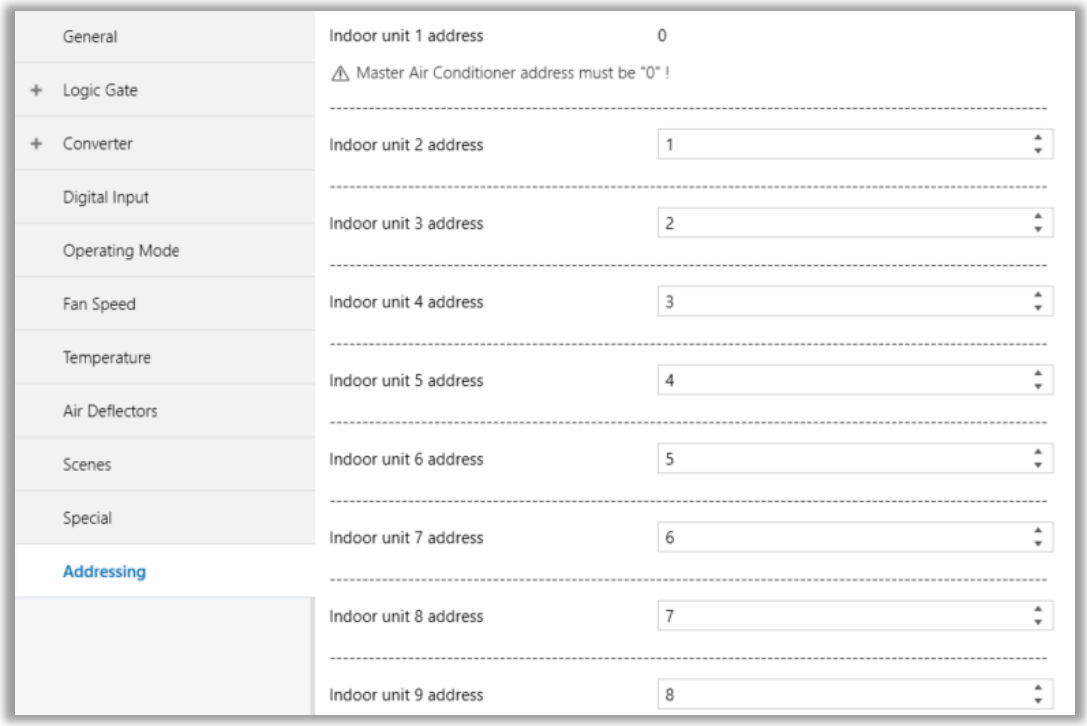

Fig. 21: Addressing Configuration Parameter Page

- AC indoor unit address must be different from each other.
- Addresses must be correct value configured in indoor unit.

3.11.1. Parameters List

PARAMETERS	DESCRIPTION	VALUES
Indoor unit X address	This parameter is used to set indoor unit address. Master air conditioner address must be always 0. Therefore “Indoor unit 1 address” parameter can not be set different from “0”.	**0 … 255**

©2024 INTERRA

4. ETS Objects List & Descriptions

The Haier VRF AC - KNX Gateway can communicate via the KNX bus line. In this section, the group objects of the Haier VRF AC - KNX Gateway are described.

ETS group objects are divided into 10 main parts, and these are :

- **General** - General group objects to the Haier ABC Port Gateway.
- **Logic Gate** - These objects are related to logic gate parameters.
- **Converter** - These objects are related to converter parameters.
- **Digital Input** - These objects are related to digital input parameters.
- **Operating Mode** - These objects are related to operating mode parameters.
- **Fan Speed** - These objects are related to fan parameters.
- **Temperature** - These objects are related to temperature parameters
- **Air Deflectors** - These objects are related to vanes parameters.
- **Scenes**- These objects are related to scenes parameters.
- **Special** - These objects are related to special functions.

Special Note

Due to the flexible ETS configurations feature, some group objects are dynamic and they are only visible if the related parameters are activated in the application program.

All of the group objects of Interra Haier VRF AC - KNX Gateway are listed below. You can quickly browse through this table to get the functional capabilities of Interra Haier VRF AC Gateway. The device can operate up to 16 indoor units. Each indoor unit has its own individual communication objects.

The detailed functions of group objects are described in different topics.

©2024 INTERRA

4.1. General Objects

This section describes the "General" group objects and their properties. General group objects, as the name suggests, indicate the general characteristics of the Gateway.

Object Name	Function	Type	Flags
Alive beacon	1:True/0:False	1 bit	CT
This object is used to monitor the presence of the device on the KNX bus line regularly. However, monitoring telegrams can be sent cyclically on the KNX bus line. This object appears only the “Alive beacon state” parameter is enabled.			
ACXX OnOff	1:On/0:Off	1 bit	CW
This object is used to turn the Gateway on or off. Also, this object is visible permanently. If you associate the desired group address, Gateway can be controlled with On and Off.			
ACXX OnOff_Feedback	1:On/0:Off	1 bit	CRT
This object is used to check the status of the air conditioner unit. Also, this object is visible permanently. If you associate the desired group address, Gateway’s ON and OFF status can be monitored.			
ACXX Setpoint Temperature Control	Temperature (Celsius)	2 bytes	CW
This object is used to set the air conditioner unit’s temperature. Also, this object is visible permanently. The temperature can be set to the desired value and then the air conditioner works according to this value.			
ACXX Error Alarm Feedback	1:Alarm/0:No Alarm	1 bit	CRT
This object is used to check the status of the air conditioner unit’s error alarm. Also, this object is visible permanently. If there is an error alarm and a group address is associated with the corresponding object, the alarm can be monitored.			
ACXX Error Code Feedback	Error Code Information	2 bytes	CRT
This object is used to give information about the error codes. This functionality allows sending messages to the KNX bus informing about errors. Errors management handles air conditioner unit error codes as well as any communication errors that may arise. For more detailed information check the section APPENDIX.			
ACXX Error Code Text Feedback	Error Text Information	14 bytes	CRT
This object is used to give information about the 2 Byte error codes in string format.			
ACXX Device Control Locking	1:Enabled / 0:Disabled 0:Enabled / 1:Disabled	1 bit	CRT
This object is used to lock the gateway device. When a value that predetermined from parameter is sent to this communication object, the gateway is locked. If a value is sent to the gateway via its communication objects, all values are ignored. For unlocking the gateway, a opposite value of determined from parameter must be sent.			

©2024 INTERRA

4.2. Logic Gate Objects

This section describes the "Logic Gate" group objects and their properties. Logic Gate group objects, as the name suggests, indicate the logical operations that can be made with Gateway.

Object Name	Function	Type	Flags
Logic X – Input 1 Logic X – Input 2 Logic X – Input 3 Logic X – Input 4	Logic Input	1 bit	CRW
This object is used to set the inputs of the logical gate to be used. Logical associations can be made over 1-bit values. The result is obtained according to the type of logical gate selected.			
Logic X – Output	Logic Output	1 bit	CRT
This object is used to obtain the result of the logical gate to be used. The output value of the logical gate is 1 bit. The result is obtained according to the type of logical gate selected.			

Special Notes
This is a fully compatible KNX device that must be configured and set up using the standard KNX tool ETS. Up to 4 different logic gates can be selected. Each logic gate can be set independently.

©2024 INTERRA

4.3. Converter Objects

This section describes the "Converter" group objects and their properties. Converter group objects are used to make mathematical operations and data converting from different types. Up to 8 different converters can be configured.

Object Name	Function	Type	Flags
Converter X – Input (1 Bit) Converter X – Input (2 Bits) Converter X – Input (1 Byte) Converter X – Input (2 Bytes)	Converter Input	1 bit 2 bits 1 byte 2 bytes	CRW
This object is used to set the converter inputs to be used. The conversion processes can be made via 1 bit, 2 bit, 1 byte and 2-byte values. The result is obtained according to the input type of the selected converter.			
Converter X – Output (1 Bit) Converter X – Output (2 Bits) Converter X – Output (1 Byte) Converter X – Output (2 Bytes)	Converter Output	1 bit 2 bits 1 byte 2 bytes	CRWT
This object is used to obtain the result of the converter to be used. The output value of the converter can be 1 bit, 2-bit, 1 byte and 2 bytes. The result is obtained according to the configuration of the selected converter.			

4.4 Digital Input Objects

This section describes the "Digital Input" group objects and their properties. This is a fully compatible KNX device that must be configured and set up using the standard KNX tool ETS. Up to 3 different digital input can be selected. Each digital input can be set independently.

Object Name	Function	Type	Flags
Input X	Block	1 bit	CW
This object is used to block digital input functionality.			
Input X	Switch	1 bit	CRWT
This object is used to set or reset digital input functionality in short time.			
Input X	Switch Long	1 bit	CRWT
This object is used to set or reset digital input functionality in determined long time.			

©2024 INTERRA

4.5. Operating Mode Objects

This section describes the "Operating Mode" group objects and their properties. Heat, cool, dry, auto and fan mode communication objects are described. Also, simple heating-cooling objects are clarified.

Object Name	Function	Type	Flags
ACXX Operating_Mode	0-Auto;1-Heat;3-Cool;9-Fan;14-Dry	1 byte	CW
This object is used to set the operating modes of the air conditioner. You can select AUTO with 0, HEAT with 1, COOL with 3, FAN with 9, and DRY with 14.			
ACXX Operating_Mode_ Feedback	0-Auto;1-Heat;3-Cool;9-Fan;14-Dry	1 byte	CRT
This object is used to monitor the status of the operating modes of the air conditioner. With value 0 the status is AUTO, with value 1 the status is HEAT, with value 3 status is COOL, with value 9 the status is FAN and with value 14 the status is DRY can be understood.			
ACXX Mode Cool/Heat	0-Cool;1-Heat 0-Heat;1-Cool	1 bit	CW
This object is used to set the operating mode of the air conditioner unit. When selecting this option, the related 1-bit object will be enabled. It allows establishing the desired mode: Cool mode, writing the value "0" in the object and Heat mode, writing the value "1" or vice versa.			
ACXX Mode Cool/Heat Feedback	0-Cool;1-Heat 0-Heat;1-Cool	1 bit	CRT
This object is used to check the operating mode of the air conditioner unit.			
ACXX Mode Heating_Percentage	0%-Off;1%-100%-On+Heat	1 byte	CW
This object is used to change operating mode to heat via incoming percentage value. It also provides compatibility with KNX thermostats that control the demand for heating or cooling by using percentage values. In these thermostats, the percentage demand is meant to be applied on a fluid valve of the heating/cooling system. If a non-zero value is received (>0%) the indoor unit will switch on to Heat mode.			
ACXX Mode Cooling_Percentage	0%-Off;1%-100%-On+Cool	1 byte	CW
This object is used to change operating mode to cool via incoming percentage value. It also provides compatibility with KNX thermostats that control the demand for heating or cooling by using percentage values. In these thermostats, the percentage demand is meant to be applied on a fluid valve of the heating/cooling system. If a non-zero value is received (>0%) the indoor unit will switch on to Cool mode.			
ACXX Mode Auto	1-Set AUTO Mode	1 bit	CW
This object is used to change the air conditioner's operating mode to auto mode via a 1-bit object individually. If the value 1 is sent over the 1-bit value, the air conditioning unit will switch to automatic mode.			

©2024 INTERRA

ACXX Mode Auto Feedback	1-Set AUTO Mode	1 bit	CRT
This object is used to monitor the air condition unit status individually. If value 1 is received from this object, the operating mode is auto.			
ACXX Mode Heat	1-Set HEAT mode	1 bit	CW
This object is used to change the air conditioner's operating mode to heat mode via a 1-bit object individually. If the value 1 is sent over the 1-bit value, the air conditioning unit will switch to heat mode.			
ACXX Mode Heat Feedback	1-Set HEAT mode	1 bit	CRT
This object is used to monitor the air condition unit status individually. If value 1 is received from this object, the operating mode is heating.			
ACXX Mode Cool	1-Set COOL mode	1 bit	CW
This object is used to change the air conditioner's operating mode to cool mode via a 1-bit object individually. If the value 1 is sent over the 1-bit value, the air conditioning unit will switch to cool mode.			
ACXX Mode Cool Feedback	1-Set COOL mode	1 bit	CRT
This object is used to monitor the air condition unit status individually. If value 1 is received from this object, the operating mode is cool.			
ACXX Mode Fan	1-Set FAN mode	1 bit	CW
This object is used to change the air conditioner's operating mode to fan mode via a 1-bit object individually. If the value 1 is sent over the 1-bit value, the air conditioning unit will switch to fan mode.			
ACXX Mode Fan Feedback	1-Set FAN mode	1 bit	CRT
This object is used to monitor the air condition unit status individually. If value 1 is received from this object, the operating mode is the fan.			
ACXX Mode Dry	1-Set DRY mode	1 bit	CW
This object is used to change the air conditioner's operating mode to dry mode via a 1-bit object individually. If the value 1 is sent over the 1-bit value, the air conditioning unit will switch to dry mode.			
ACXX Mode Dry Feedback	1-Set DRY mode	1 bit	CRT
This object is used to monitor the air condition unit status individually. If value 1 is received from this object, the operating mode is dry.			
ACXX Mode +/-	0-Decrease;1-Increase	1 bit	CW
This object changes between operating modes as +/- via 1-bit value. This object is used to switch between the operating modes of the air conditioning unit in a loop. If a continuous value is sent in the increasing direction, it follows the following sequence and returns to the beginning when reaches the last mode. 1:Increase : auto->heat->cool->fan->dry			

©2024 INTERRA

0:Decrease : dry -> fan -> cool -> heat -> auto			
ACXX Operating Mode +/-	0-Up;1-Down	1 bit	CWT
This object changes between operating modes as +/- via 1-bit value. This object is used to switch between the operating modes of the air conditioning unit in a loop. If a continuous value is sent in the increasing direction, it follows the following sequence and returns to the beginning when reaches the last mode. 0:Up : auto->heat->cool->fan->dry 1:Down : dry -> fan -> cool -> heat -> auto			
ACXX Operating Mode Text Feedback	Text Feedback	14 bytes	CRT
This object is used to monitor the operation mode of the air conditioning unit in text format via the KNX bus line. Naming can be made for each operating mode with a length of 14 bytes.			

©2024 INTERRA

4.6. Fan Group Objects

In this section, fan group objects and their properties are described.

Object Name	Function	Type	Flags
ACXX Fan Speed Scaling	Threshold defined in parameter	1 byte	CW
This object is used to set fan speeds in percentages. 5 different fan speeds can be configured according to the specified threshold values. For example, select Fan speed 1 lower limit is 30% and Fan speed 2 lower limit is 55%. If a 45% value is sent over this object, fan speed will be fan1.			
ACXX Fan Speed Scaling Feedback	% Percentage value	1 byte	CRT
This object gives last value about communication object fan speed scaling percentage.			
ACXX Fan Speed Enumerated	0-Auto;1-Speed1;…5-Speed5	1 byte	CW
This object is used to determine the fan speed by selecting between 0-5 values. For example, if value 1 is sent, fan speed will be fan 1.			
ACXX Fan Speed Enumerated Feedback	0-Auto;1-Speed1;…5-Speed5	1 byte	CRT
This object is used to receive current fan speed in between 0-5 values.			
ACXX Fan Speed 1 Control	1-Set Fan Speed 1	1 bit	CW
This object is used to select fan speed 1 individually. If a value 1 is sent, the fan speed will be fan 1.			
ACXX Fan Speed 1 Feedback	1-Set Fan Speed 1	1 bit	CRT
This object is used to monitor the fan speed 1 of the air conditioner.			
ACXX Fan Speed 2 Control	1-Set Fan Speed 2	1 bit	CW
This object is used to select fan speed 2 individually. If a value 1 is sent, the fan speed will be fan 2.			
ACXX Fan Speed 2 Feedback	1-Set Fan Speed 2	1 bit	CRT
This object is used to monitor the fan speed 2 of the air conditioner.			
ACXX Fan Speed 3 Control	1-Set Fan Speed 3	1 bit	CW
This object is used to select fan speed 3 individually. If a value 1 is sent, the fan speed will be fan 3.			
ACXX Fan Speed 3 Feedback	1-Set Fan Speed 3	1 bit	CRT
This object is used to monitor the fan speed 3 of the air conditioner.			

©2024 INTERRA

ACXX Fan Speed 4 Control	1-Set Fan Speed 4	1 bit	CW
This object is used to select fan speed 4 individually. If a value 1 is sent, the fan speed will be fan 4.			
ACXX Fan Speed 4 Feedback	1-Set Fan Speed 4	1 bit	CRT
This object is used to monitor the fan speed 4 of the air conditioner.			
ACXX Fan Speed 5 Control	1-Set Fan Speed 5	1 bit	CW
This object is used to select fan speed 5 individually. If a value 1 is sent, the fan speed will be fan 5.			
ACXX Fan Speed 5 Feedback	1-Set Fan Speed 5	1 bit	CRT
This object is used to monitor the fan speed 5 of the air conditioner.			
ACXX Fan Speed Auto Control	1-Set Fan Speed Auto	1 bit	CW
This object is used to select fan speed Auto individually. If a value 1 is sent, the fan speed will be fan Auto. After this object is disabled, means value 0 is sent, fan speed returns the state before auto fan speed set.			
ACXX Fan Speed Auto Feedback	1-Set Fan Speed Auto	1 bit	CRT
This object is used to monitor the fan speed Auto of the air conditioner.			
ACXX Fan Speed +/-	0-Decrease;1-Increase	1 bit	CW
This object is used to change between fan speed levels with a 1-bit value. If a continuous value is sent in the increasing direction, it follows the following sequence. Additionally, if the “Loop the sequence” parameter is activated, increasing or decreasing that returns the mode to the beginning when it reaches the last mode. 1:Increase : auto->fan speed 1->fan speed 2->fan speed 3-> fan speed 4->fan speed 5 0:Decrease : fan speed 5-> fan speed 4->Fan speed 3->fan speed 2->fan speed 1->auto			
ACXX Fan Speed +/-	0-Up;1-Down	1 bit	CW
This object is used to change between fan speed levels with a 1-bit value. If a continuous value is sent in the increasing direction, it follows the following sequence. Additionally, if the “Loop the sequence” parameter is activated, increasing or decreasing that returns the mode to the beginning when it reaches the last mode. 0:Up : auto->fan speed 1->fan speed 2->fan speed 3-> fan speed 4->fan speed 5 1:Down : fan speed 5-> fan speed 4->Fan speed 3->fan speed 2->fan speed 1->auto			
ACXX Fan Speed Text Feedback	Fan Speed Text	14 bytes	CRT
This object is used to receive the air conditioner unit's fan speed status via text format. For each fan speed status up to 14 bytes are allowed to determine the name of the fan speeds.			

©2024 INTERRA

4.7. Temperature Group Objects

In this section, temperature group objects and their properties are described.

Object Name	Function	Type	Flags
ACXX Setpoint Temperature Control	Temperature(Celsius)	2 bytes	CW
This object is used to modify the setpoint temperature to be sent to the AC indoor unit according to the desired value.			
ACXX Setpoint Temperature Feedback	Temperature(Celsius)	2 bytes	CRT
This object is used to monitor the air conditioner unit setpoint temperature from the KNX bus line.			
ACXX Setpoint Temperature +/-	0-Decrease;1-Increase	1 bit	CW
This object is used to change the setpoint temperature by increasing or decreasing by a 1-bit value. If a continuous value is sent in the increasing direction, it is increased up to the highest temperature value. Likewise, if a continuous value is sent in the decreasing direction, it is decreased up to the lowest temperature value.			
ACXX Setpoint Temperature +/-	0-Up;1:Down	1 bit	CW
This object is used to change the setpoint temperature by increasing or decreasing by a 1-bit value. If a continuous value is sent in the increasing direction, it is increased up to the highest temperature value. Likewise, if a continuous value is sent in the decreasing direction, it is decreased up to the lowest temperature value.			
ACXX Ambient Temperature	Temperature (Celsius)	2 bytes	CW
This object is used to receive the KNX ambient temperature from the KNX bus line. This option only works when the Gateway operates in master mode.			
ACXX Ambient Temperature Feedback	Temperature (Celsius)	2 bytes	CRT
This object is used to read the ambient temperature that sended to air conditioner or readed from the air conditioner. • When “Enable ambient temperature” parameter is selected “No” and “Ambient temperature feedback send state” is different from “Disable”, this object shows the ambient temperature readed from air conditioner indoor temperature sensor. • When “Enable ambient temperature” parameter is selected “Yes”, this object shows the ambient temperature sended to air conditioner. If there is no ambient temperature coming from KNX bus through 5 mins, the device select ambient temperature reference as “AC indoor sensor temp” until ambient temperature value sends over KNX again. Temperature value readed from indoor unit can be observed in KNX bus.			

©2024 INTERRA

4.8. Air deflectors Group Objects

In this section, vane group objects and their properties are described.

Object Name	Function	Type	Flags
ACXX Air Deflector Broadcast Value	0-Swing;1-Pos1;…5-Pos5	1 byte	CW
This object is used to receive the current air deflector position in between 0-5 values.			
ACXX Air Deflector +/-	0-Decrease ;1-Increase	1 bit	CW
This object is used to change between air deflector position levels with a 1-bit value. If a continuous value is sent in the increasing direction, it follows the following sequence. Additionally, if the “Loop the sequence” parameter is activated, increasing or decreasing that returns the mode to the beginning when it reaches the last mode. 1:Increase : Swing ->pos 1->pos 2->pos 3->pos 4->pos 5 0:Decrease : pos 5->pos 4->pos 3->pos 2->pos 1->Swing			
ACXX Air Deflector +/-	0-Up;1-Down	1 bit	CW
This object is used to change between air defletor position levels with a 1-bit value. If a continuous value is sent in the increasing direction, it follows the following sequence. Additionally, if the “Loop the sequence” parameter is activated, increasing or decreasing that returns the mode to the beginning when it reaches the last mode. 0:Up : Swing->pos 1->pos 2->pos 3->pos 4->pos 5 1:Down : pos 5->pos 4->pos 3->pos 2->pos 1->Swing			
ACXX Air Deflector Feedback	0-Swing;1-Pos1;…5-Pos5	1 byte	CRT
This object is used to receive the air conditioner unit's air deflector position status via 1 byte object.			

©2024 INTERRA

4.9. Scene Group Objects

In this section, scene group objects and their properties are described.

Object Name	Function	Type	Flags
ACXX Scene	1-63 (Execute 1-64) ; 128-191 (Storage 1-64)	1 byte	CRWTU
This object is used to execute or store a scenario with a specified scenario number. According to the KNX scenario numbers could be between 1-64. If a scenario wanted to be stored, the scenario number + 128 value must be sent. Also, this object is always visible.			
ACXX Scene 1…5 Run	0-Nothing;1-Run Scene	1 bit	CWT
This object is used to run the associated scenario number 1 to 5. These scenario numbers are listed on the scene parameter page.			
ACXX Scene 1…5 Storage	0-Nothing;1-Storage Scene	1 bit	CWT
This object is used to record the current status of the air conditioner unit to the desired scenario from 1 to 5. The desired scenario number (e.g., 68) can be assigned to these scenes.			
ACXX Current Scene Feedback	1-64:Current Scene	1 byte	CRT
This object is used to view the current scene of the air conditioner unit. Scene values can be monitored from the KNX bus line. According to KNX standards scene values should be between 1-64.			

©2024 INTERRA

4.10. Special Group Objects

In this section, special functions group objects and their properties are described.

Object Name	Function	Type	Flags
ACXX Working Hour Counter Feedback	Working Hours Counter Feedback	5 bytes	CRT
This object is used to detect the air conditioner's operating hours in working mode. When the air conditioner starts to work, the working hours counter starts to count the value.			
ACXX Working Hour Alert Feedback	0-No Alarm;1-Alarm	1 bit	CRT
This object is used to view the air conditioner unit's alert status when the specified working hours operation period ends. Counter creates an alert to warn the user.			
ACXX Reset Hours Counter	0-No Action;1-Reset	1 bit	CW
This object is used to reset the counted hours by the working hours counter function. If a value 1 is sent via this object, the working hours counter will be reset.			
ACXX Window Contact Status	0-Opened;1-Closed 0-Closed;1-Opened	1 bit	CRWT
This object is used to receive the status of the window contact. It can be configured which value to which it means from the parameter page.			
ACXX Window Switch-Off Delay	Values are accepted according to the data type of 20.013.	1 byte	CW
This object is used to switch off the air condition unit according to delay time by a 1-byte value.			
ACXX Standby 1 Function	0-Not Occupied;1-Occupied 0-Stop;1-Start	1 bit	CW
This object is used to control the standby function of the air conditioner unit. The object also can be parameterized as start/stop or occupied/not occupied.			
ACXX Standby Function Feedback	0-Not Occupied;1-Occupied 0-Stop;1-Start	1 bit	CRT
This object is used to view the air condition unit's standby function status.			
ACXX Standby 1 Delay	Values are accepted according to the data type of 20.013.	1 byte	CW
This object is used to set the delay time of the air conditioner unit's standby function.			
ACXX Standby 2 Setpoint Shifting	Temperature (Celsius)	2 bytes	CWT

©2024 INTERRA

This object is used to set the setpoint shifting of the air conditioner unit's standby function.			
ACXX Standby 2 Delay	Values are accepted according to the data type of 20.013.	1 byte	CW
This object is used to set the delay time of the air conditioner unit's standby function.			
ACXX Standby 2 Setpoint Shifting	Temperature (Celsius)	2 bytes	CWT
This object is used to set the setpoint shifting of the air conditioner unit's standby function			
Timer Function	0-Stop;1:Start 0-Start;1:Stop	1 bit	CW
This object is used to control the timer function of the air conditioner unit. The start and stop operations can be determined with which value will be used. Value 1 can be start function or stop according to settings. The air conditioner will stop after time is ended.			
Feedback Timer Function	0-Stop;1:Start 0-Start;1:Stop	1 bit	CRT
This object is used to view the timer function status of the air conditioner unit.			
Timer Duration	Values are accepted according to the data type of 20.013	1 byte	CW
This object is used to specify the time duration of the timer function.			

©2024 INTERRA

Appendix

Error Code KNX	Error Type	Error Definition
1	Indoor Unit	Indoor ambient temp sensor TA (Tas) failure
2		Indoor gas pipe temp sensor TC1 failure
3		Indoor liquid pipe temp. sensor TC2 failure
4		Dual heat source sensor TW failure
5		Indoor EEPROM failure
6		Communication between indoor and outdoor failure
7		Communication between indoor and wired controller failure
8		Indoor float switch failure
9		Indoor address repeated failure
10		Reserved
11		Reserved
12		No 50 Hz zero passage signal
13		Coil sensor TC3 failure
14		DC motor failure
15		Indoor ambient temp. sensor TA (Taf) failure
4096		Communication Error
4097		Transmit Error
4098		Receive Error
4099		Clock does not exist
4100		There is not available NTC thermistor
4101		No ambient temperature error
4102		No hardware digital input connected
20	Outdoor Unit	"Defrosting temp. sensor Tdef1 failure Defrosting temp. sensor Tdef2 failure"
21		Ambient temp. sensor Ta failure
22		"Suction temp. sensor Ts1 failure Suction temp. sensor Ts2 failure Suction temp, sensor Tsacc failure Suction temp. sensor Tsuc failure"

©2024 INTERRA

23	"Discharging temp sensor Tdi failure Discharging temp sensor Td1 failure Discharging temp sensor Td2 failure"
24	"Oil temp sensor Toilp failure Oil temp sensor Toil failure."
25	"Inlet temp of heat exchanger Toci1 failure Inlet temp. of heat exchanger Toci2 failure"
26	"indoor communication failure Reduce the number of indoor units failure Increase the number of indoor units failure"
27	"Oil temp, too high protection (Toil) Oil temp too high protection (Toi2)"
28	"High pressure sensor Pd1 failure High pressure sensor Pd2 failure"
29	Low pressure sensor Ps failure
30	"High pressure switch HPSi failure High pressure switch HPS1 failure High pressure switch HPS2 failure"
31	Liquid pipe pressure Pl failure
32	"Outlet temp of subcooler Tsco failure Liquid pipe SC temp of subcooler Tliqsc failure"
33	EEPROM (AT24C04) failure
34	"Discharging temp too high protection (Tdi) Discharging temp too high protection (Td1) Discharging temp too high protection (Td2)"
35	"4 - way valve reversing failure 4 - way valve reversing failure"
36	"Oil temp, too low protection (Toil) Oil temp too low protection (Toi2)"
37	Lack of phase of 3N power supply or wrong phase sequence
38	High pressure sensor Pd too low protection
39	"Low pressure sensor Ps too low protection Compression ratio too high protection Compression 1 ratio too low protection Compression 2 ratio too low protection"
40	"High pressure sensor Pd1 too high protection High pressure sensor Pd2 too high protection"
41	"Water temp Twi too low protection Water temp Twi too high protection"
42	"Frost protection of water system Water system out of water freeze protection Water flow of Water system is too small to protect"
43	"Discharging temp sensor Tdi too low protection Discharging temp sensor Td1 too low protection Discharging temp sensor Td2 too low protection"
44	Low pressure sensor PS too high protection
45	Communication among outdoors failure
46	"Communication with inverter board 1 failure Communication with inverter board 2 failure"
48	Unloading valve SV1 failure
53	Current detector CT1 failure

©2024 INTERRA

54	Communication with Thermal storage module failure
55	Thermal storage module LEV failure
56	Thermal storage module too hot failure
57	Communication between Thermal storage module and host computer
58	Thermal storage module Tc1 temp sensor failure
59	Thermal storage module Tc2 temp sensor failure
60	Reserved
61	Reserved
62	Reserved
63	Thermal storage module DIP setting failure
64	"CT1 over current CT2 over current"
67	Communication with motor driving board failure
71	"Left DC motor blocked Right DC motor blocked"
72	"Left DC motor reversed Right DC motor reversed"
73	"Left DC motor current too high Right DC motor current too high"
75	"No pressure drop between high pressure and low one Pressure too low between high pressure and low one"
76	Incorrect outdoor address or capacity setting
77	Oil equalization protection among outdoors
78	"Lack of refrigerant in cooling Lack of refrigerant in heating"
79	Incorrect wiring
80	Indoor and outdoor do not match
81	Model temp too high protection
82	Compressor current protection
83	Wrong model selection
99	Program self - test failure
100	DC motor driving board IPM alarm
101	DC motor driving board detecting out of control
102	DC motor driving board EEPROM faulty
103	DC motor driving board over current or current detector damaged
104	Voltage too low protection of DC motor driving board

©2024 INTERRA

105	Voltage too high protection of DC motor driving board
106	DC motor driving board blocked
107	Protection of motor rate over Limitation
110	"Model 1 Over current model 2 Over current"
111	"Compressor 1 out of control Compressor 2 out of control"
112	"Radiator of model 1 temp too high Radiator of model 2 temp too high"
113	"Model 1 overload model 2 overload"
114	"Voltage too low of model 1 Voltage too low of model 2"
115	"Voltage too high of model 1 Voltage too high of model 2"
116	"Communication abnormal with model 1 Communication abnormal with model 2"
117	"Model 1 Over current (software)"
118	"Model 1 startup failure Model 2 startup failure"
119	"Current Detecting Circuit Abnormal of transducer 1 Current Detecting Circuit Abnormal of transducer 2"
120	"Power supply of transducer 1 abnormal Power supply of transducer 2 abnormal"
121	"Power supply of inverter board 1 is abnormal Power supply of inverter board 2 is abnormal"
122	"Radiator temp sensor of transducer 1 abnormal Radiator temp sensor of transducer 2 abnormal"
125	"Compressor 1 frequency not match Compressor 2 frequency not match"
127	MCU reset abnormal
128	MCU Program needs to be upgraded

Special Notes

If you encounter an error code not listed in this table, please contact your nearest Haier technical service.

©2024 INTERRA

CONTACT INFORMATION

THE INTERRA WEBSITE

Interra provides documentation support via our website www.interratechnology.com. This website is used as a means to make files and information easily available to customers. Accessible by using your favourite Internet browser, the website contains the following information:

- Information about our products and projects.
- Overview of Interra company and values.
- Product Support: Datasheets, product manuals, application descriptions, latest software releases, ETS databases and archived software.

EUROPE, Turkey

Interra
Cumhuriyet mah. Kartal cad. Interra R&D Center No:95/1 Kartal/İstanbul
Tel: +90 (216) 326 26 40 Fax: +90 (216) 324 25 03
Web adress: http://www.interratechnology.com

©2024 INTERRA